VILLAGE OF Hinsdale Est. 1873

**Village of Hinsdale**
**19 E. Chicago Avenue**
**Hinsdale, IL 60521-3489**
**(630)789-7000**
**Village Website: www.villageofhinsdale.org**

## PUBLIC SERVICES UTILITY PERMIT APPLICATION - Permit Fee of $100.00

Date of Application: 06-20-22 Permit No: VER-0016 Permit Expiration Date: ~~10-31-22~~ 12-31-22 REV. 9/21/22 AGD

**Utility Company Information**:

Company Name: MCImetro Access Transmission Services Corp.
Address: 600 Hidden Ridge
City, State, Zip: Irving, TX 75038
Contact Person: Jeanette Chamorro
Phone Number: 512-296-8166
Email Address: jeanette.chamorromercado@ledcor.com
Cell Number:
Project/Work Order Number: Chicago15264

**Contractor Information**:

Company Name: LTS Technical Services LLC.
Address: 723 N. Oaklawn Ave
City, State, Zip: Elmhurst, IL 60126
Contact Person: Kyle Ayers
Phone Number: 3128350952
Email Address: kyle.ayers@ledcor.com
Cell Number: 3128350952

**PROJECT LOCATION:** 120 N Oak St

Description of work covered under this permit:
PLACE (1) 17" X 30" HANDHOLE- PLACE 502' OF 1-2" HDPE- DIRECTIONAL BORE 497'- OPEN TRENCH 5'

**Start Date:** ~~TBD~~ 09/22/22 AGD **Completion Date:** ~~TBD~~ 12/31/22 AGD

Site Plan/Details/Specifications (3 sets) included with application? ⊙ YES ○ NO
Currently registered as a Utility Contractor with the Village of Hinsdale? ⊙ YES ○ NO
Engineer Estimate of Cost included with application? ⊙ YES ○ NO

**Type of Utility**: ☐ ComEd ☐ Nicor ☐ Comcast ☐ Water ☐ Sewer
☐ Communications: ☑ Fiber Optic ☐ Wireless ☐ Other:

**Applicant Information**:

Print Name: Joshua Pathammavong
Phone Number: 312-625-9977
Company: LTS Technical Services, LLC
Email Address: Joshua.Pathammavong@Ledcor.com
Signature:
Date: 6-20-22

ALL CONSTRUCTION SHALL BE DONE IN ACCORDANCE WITH THE LATEST EDITION IN EFFECT ON THE DATE OF PERMIT APPLICATION OF THE FOLLOWING: STANDARD SPECIFICATIONS FOR ROAD AND BRIDGE CONSTRUCTION & SUPPLEMENTAL SPECIFICATIONS AND RECURRING SPECIAL PROVISIONS BY THE ILLINOIS DEPARTMENT OF TRANSPORTATION, ILLINOIS MANUAL ON UNIFORM TRAFFIC CONTROL DEVICES FOR STREETS AND HIGHWAYS, STANDARD SPECIFICATIONS FOR WATER AND SEWER MAIN CONSTRUCTION IN ILLINOIS, AND THE VILLAGE OF HINSDALE SUBDIVISION ORDINANCES (Ord. O2007-73, 11-6-2007) AND ENGINEERING STANDARDS.

**Village Use Only**

Permit Approved: ☑ YES ☐ NO

Conditions for Approval/Reasons for Denial: RESTORE ALL DISTURBED AREAS WITHIN 14 DAYS OF COMPLETION. NOTIFY LOCAL RESIDENTS AND BUSINESSES 48 HOURS PRIOR TO START

Approved By A. DIAZ Date: 08-08-22

# MCImetro
# ACCESS TRANSMISSION SERVICES CORP.

D/B/A - VERIZON ACCESS TRANSMISSION SERVICES

## PROJECT NAME: HINSDALE AND PARK SC
## PROJECT #: 1812BTLW-PE-MCA-15264-1
## PERMITTING AGENCY - VILLAGE OF HINSDALE

VICINITY MAP
HINSDALE, IL

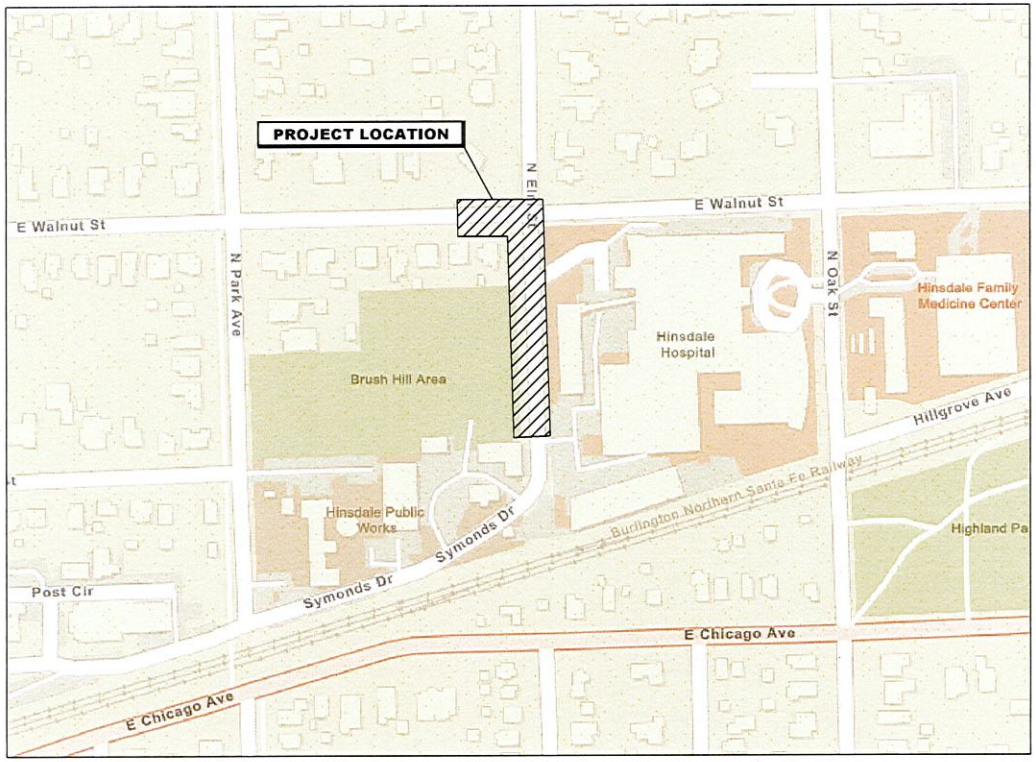


TABLE OF CONTENTS:


1. COVER SHEET
2. PROJECT CONTACT & NOTES SHEET
3. F.O.C.U.S. SHEET
4. CLARIFICATION SUMMARY SHEET
5. SYMBOLS SHEET
6. HANDHOLE DETAIL
7. ADDITIONAL NOTES AND DETAILS
8. PLAN VIEW
9-15. (TC)


| SCOPE OF WORK |
|---|
| - PLACE (1) 17" X 30" HANDHOLE |
| - PLACE 502' OF 1-2" HDPE |
| - DIRECTIONAL BORE 497' |
| - OPEN TRENCH 5' |

NORTH

NOT FOR CONSTRUCTION

PROJECT:
1812BTLW-PE-MCA-15264-1
HINSDALE, IL

| CLARIFICATION NO. | QUANTITY |
|---|---|
| 630 | 497' |
| 640 | 5' |
| 212 | 502' |
| 240 | 1 EA |

MCImetro
ACCESS TRANSMISSION SERVICES CORP.
OUTSIDE PLANT CONSTRUCTION
TITLE: 1812BTLW-PE-MCA-15264-1

DATE: 6/16/2022
DESIGNER: LEDCOR GROUP
DRAWN BY: M. NEUENDORFF

REVISIONS

| DATE | DESCRIPTION | INITIAL |
|---|---|---|
| 6/16/22 | JX REVISION | MON |


EXCEPT AS MAY BE OTHERWISE PROVIDED BY CONTRACT THESE DRAWINGS AND SPECIFICATIONS SHALL REMAIN THE PROPERTY OF MCI COMMUNICATIONS SERVICES, INC. BOTH BEING ISSUED IN STRICT CONFIDENCE AND SHALL NOT BE REPRODUCED, COPIED OR USED FOR ANY PURPOSE WITHOUT SPECIFIC WRITTEN PERMISSION.


CRAN HUB:
CH BROOKFIELD

PERMIT ID: 15264

SCALE
HORIZONTAL: NTS
VERTICAL: NTS
MP _____ TO MP _____

SHEET 1 OF 15
FILE: 1812BTLW-PE-MCA-15264-1

## GENERAL NOTES

1. MCI COMPRISES THE FOLLOWING OPERATING ENTITIES
   - MCI COMMUNICATIONS SERVICES, INC.
   - MCI METRO ACCESS TRANSMISSION SERVICES CORP.
   - MCI METRO ACCESS TRANSMISSION SERVICES OF VIRGINIA, INC.
   - MCI METRO ACCESS TRANSMISSION SERVICES OF MASSACHUSETTS, INC.
   - METROPOLITIAN FIBER SYSTEMS OF NEW YORK, INC.

2. ALL WORK TO BE DONE WITH EXTREME CAUTION ! FIBER OPTIC CABLE IS CARRYING TRAFFIC AND LOSS OF SERVICE WILL RESULT IN LOSS OF REVENUE. CONTRACTOR SHALL NOT WORK IN A MANNER THAT MAY AFFECT TRAFFIC-CARRYING FACILITIES IN THE ABSENCE OF AN MCI EMPLOYEE OR CERTIFIED CONTRACTOR.

3. ALL WORK TO BE PERFORMED IN STRICT ACCORDANCE WITH THE APPLICABLE CODES OR REQUIREMENTS OF ANY REGULATING GOVERNMENTAL AGENCY, MCI BUSINESS, OR THE RIGHT-OF-WAY- GRANTOR.

4. LOCATIONS OF SOME OF THE PHYSICAL FEATURES WERE OBTAINED FROM DATED RAILROAD VALUATION MAPS OR OTHER DRAWINGS, AND MAY BE AS SHOWN OR DEPICTED ON THESE DRAWINGS.

5. UNDERGROUND UTILITIES HAVE BEEN PLOTTED FROM AVAILABLE RECORDS AND FIELD OBSERVATIONS, BUT ARE NOT NECESSARILY EXACT. THERFORE, UTILITY LOCATIONS WILL BE VERIFIED AT LEAST 100 FEET IN ADVANCE OF TRENCHING OR PLOWING, SO THAT CHANGES IN CABLE PLACEMENT CAN BE MADE IN EVENT OF CONFLICTS.

6. ALL KNOWN BURIED OBSTRUCTIONS ARE SHOWN ON THE CONSTRUCTION DRAWINGS. ANY AND ALL OTHERS ENCOUNTERED ARE ALSO THE RESPONSIBILITY OF THE CONTRACTOR TO LOCATE, PROTECT, AND REPAIR, IF DAMAGED.

7. ANY AND ALL IMPROVEMENTS, SUCH AS ASPHALT OR CONCRETE PAVEMENT, CURBS, GUTTERS, WALKS, DRAINAGE DITCHES, EMBANKMENTS, SHRUBS, TREES, GRASS SOD, ETC., IF DAMAGED, SHALL BE RESTORED TO ORGINAL OR BETTER CONDITION.

8. EQUIPMENT TYPES SPECIFIED HEREIN (ie: "BACKHOE, "SWAMP PLOW", ETC.) ARE SUGGESTIONS ONLY AND ARE NOT INTENDED AS REQUIREMENTS. CONTRACTOR WILL BE NOTIFIED

## CONSTRUCTION NOTES

1. ALL CONDUIT WILL BE 2" HDPE

2. CONTRACTOR IS RESPONSIBLE FOR LOCATING ALL UTILITIES 48 HOURS PRIOR TO CONSTRUCTION ACTIVITY.

3. ALL UNDERGROUND OBSTRUCTIONS, WHEN LOCATED, WILL REQUIRE THE PLACEMENT OF A BURIED CABLE MARKER AND THE PLACEMENT OF 4" MANUFACTURED SPLIT PVC, BSP/GSP OVER OR UNDER EACH OBSTRUCTION.

4. SHORING MAY BE REQUIRED AND SHALL COMPLY TO O.S.H.A. STANDARDS.

5. ALL BURIED CONDUIT/CABLE WILL BE PLACED AT 36" MINIMUM COVER UNLESS SPECIFIED OTHERWISE ON THE CONSTRUCTION DRAWINGS.

6. MECHANICAL PROTECTION SHALL BE REQUIRED ANYTIME A 36" MINIMUM COVER IS UNOBTAINABLE UNLESS SPECIFIED OTHERWISE ON THE CONSTRUCTION DRAWINGS.

7. VERIZON BUSINESS PERSONNEL TO BE CONTACTED BY THE CONTRACTOR 48 HOURS PRIOR TO CONSTRUCTION. SEE CONTACT SHEET FOR CONTACT NAME AND TELEPHONE NUMBER.

8. ALL STATIONING IS BASED ON AS-BUILT INFORMATION, THEREFORE SOME VARIANCE SHOULD BE ANTICIPATED. ADJUST AS NEEDED.

9. RAILROAD COMMUNICATION AND SIGNAL CABLES TO BE LOCATED PRIOR TO CONSTRUCTION ACTIVITY. RAILROAD TO BE GIVEN 48 HOURS NOTICE PRIOR TO CONSTRUCTION.

10. ALL BURIED CABLE MARKER POSTS AND HARDWARE PLACED AND/OR REMOVED ON ALL NEW AND EXISTING ROUTES SHALL BE IMPLEMENTED AS FOLLOWS:

A. ON THOSE ROUTES THAT ARE CONSIDERED TO BE IN A NORTH TO SOUTH GEOGRAPHICAL ORIENTATION, THE SOUTHERN-MOST SIGN AND POST SHOULD BE REMOVED.
* FOR NEW ROUTES BEING CONSTRUCTED, ONE SIGN POST WILL BE PLACED AT THE NORTH END OF EACH HANDHOLE.

B. ON THOSE ROUTES THAT ARE CONSIDERED TO BE IN AN EAST TO WEST GEOGRAPHICAL ORIENTATION, THE WESTERN-MOST SIGN AND POST SHOULD BE REMOVED.
* FOR NEW ROUTES BEING CONSTRUCTED, ONE SIGN POST WILL BE PLACED AT THE EAST END OF EACH HANDHOLE.

## PROJECT CONTACTS

### DESIGN CONTRACTOR

NAME OF FIRM: LEDCOR TECHNICAL SERVICES
SENIOR DESIGN MANAGER: GREG SEYMOUR
EMAIL: GREG.SEYMOUR@LEDCOR.COM
PHONE: (312) 971-9182

### OWNERS

NAME OF FIRM: MCI METRO TRANSMISSION SERVICES CORP.
D.B.A. VERIZON ACCESS TRANSMISSION SERVICES
ENGINEER: OSCAR GUERRERO
PHONE: (312) 453-8106
EMAIL: OSCAR.GUERRERO@ONE.VERIZON.COM

### CONSTRUCTION CONTRACTOR

NAME OF FIRM: LEDCOR TECHNICAL SERVICES
CONSTRUCTION MANAGER: WAYNE SMITH
PHONE: (312) 971-1488

### CITY GOVERNMENT

VILLAGE OF HINSDALE
COMMUNITY DEVELOPMENT DEPT
19 EAST CHICAGO AVE
HINSDALE, IL 60521
PH:630-789-7030

NOT FOR CONSTRUCTION

PROJECT:
1812BTLW-PE-MCA-15264-1
HINSDALE, IL

| CLARIFICATION NO. | QUANTITY |
|---|---|
| | |

MCImetro
ACCESS TRANSMISSION SERVICES CORP.
OUTSIDE PLANT CONSTRUCTION
TITLE: 1812BTLW-PE-MCA-15264-1

DATE: 6/16/2022
DESIGNER: LEDCOR GROUP
DRAWN BY: M. NEUENDORFF

REVISIONS

| DATE | DESCRIPTION | INITIAL |
|---|---|---|
| 6/16/22 | JX REVISION | MDN |

EXCEPT AS MAY BE OTHERWISE PROVIDED BY CONTRACT THESE DRAWINGS AND SPECIFICATIONS SHALL REMAIN THE PROPERTY OF MCI COMMUNICATIONS SERVICES, INC. BOTH BEING ISSUED IN STRICT CONFIDENCE AND SHALL NOT BE REPRODUCED, COPIED OR USED FOR ANY PURPOSE WITHOUT SPECIFIC WRITTEN PERMISSION.

CRAN HUB:
CH BROOKFIELD

PERMIT ID: 15264

SCALE
HORIZONTAL: NA
VERTICAL: NA
MP _____ TO MP _____



FILE: 1812BTLW-PE-MCA-15264-1

## MCI Outside Plant FOCUS
### *F*iber *O*ptic *C*able *U*ncovering *S*ystem

1) The title of this program, F.O.C.U.S., an acronym for Fiber Optic Cable Uncovering System was selected to remind everyone involved with working near MCI's active fiber optic systems to focus on protecting the facilities. If, during the course of the project, YOU notice any activity which may jeopardize the MCI OSP facilities, it is your duty to stop the work and re- FOCUS.

2) FOCUS rules must be followed on all MCI projects involving work on or near MCI OSP facilities. Safety is MCI's number one priority, everyone must refrain from unsafe and improper practices.

3) Review of FOCUS is mandatory at every Pre-bid, Pre-construction, site meeting and daily tailgate meeting. FOCUS discussion must include site-specific history, unique problems, facility configurations that may be encountered, and past errors. "Those who do not learn from history are doomed to repeat it". Do not let this happen to you.

4) Any work near or requiring handling of MCI Outside Plant facilities can only be performed with an MCI employee or contract representative present -- **THIS MEANS OUT OF HIS OR HER VEHICLE AND DIRECTLY MONITORING THE WORK**. The representative must have a properly operating cable locator checked for accuracy every day prior to commencement of work (comparison of line and depth readings to actual line and depth of the cable).

5) Locate and Pothole Requirements.

- Prior to any excavation, the MCI employee or contract representative must verify the initial locate marks completed by MCI Operations. **Do not trust locate results completed by others!** The MCI or contract representative must locate the cable running line by making at least one pass in each direction. Locate results must then be compared with previous marks and the asbuilts.
- If the proposed work involves digging or excavating *within 3 feet* of the cable, the cable route will be marked continually with orange paint and supplemented by marker flags placed every 10 ft. The excavation contractor must pothole **(all potholes must be completed by hand digging or vacuum excavation)** a minimum of every 15 ft., then expose the entire length of the cable by hand digging or vacuum excavation.
- If the proposed work involves digging or excavating *within 5 feet (but not closer than 3 feet)* of the cable, the cable route will be marked continually with orange paint and supplemented by marker flags placed every 10ft. The excavation contractor must pothole the cable a minimum of every 15 ft.
- If the proposed work involves digging or excavating *within 15 feet (but not closer than 5 feet)* of the cable, the cable route will be marked continually with orange paint and supplemented by marker flags placed every 10 ft. The excavation contractor must pothole the cable a minimum of every 30 ft.
- The cable will also be potholed at any change in the running line of more than 1 ft. in any direction, anytime the accuracy of the electronic locate is questioned, or the marked running line does not match the as-builts.

6) Exposing Requirements.

- No mechanical excavation within 3 ft. of OSP facilities will be allowed unless the facilities have first been properly located, potholed, positively identified, continuously exposed by hand digging or vacuum excavation, and the facilities are clearly visible.
- In addition, mechanical excavation within three feet of OSP facilities requires onsite prior approval from MCI's employee or contract representative.

7) Please refer to the latest edition of the MCI OSP Handbook for additional details. Know it and follow it.

Release 1.0

## MCI Outside Plant Construction General Requirements

- All Federal, State and local safety regulations must be followed without exception.
- Personal protective equipment appropriate for the specific work site shall be used at all times. At a minimum, hard hat, safety shoes/steel toed boots and florescent orange or green work vest are required upon entering any MCI work site.
- Use of intoxicants, drugs, inhalants or any other substances that may impair alertness are strictly prohibited.
- Contractors are NOT allowed to cut any cable. Cables scheduled for removal will be cut by MCI Operations personnel, and only after verification that all traffic has been off-loaded.
- Extreme caution must be used at all times when working on or near active cables. An MCI employee or contract representative must approve and be present prior to and during all cable handling activities.
- Tools and equipment specifically designed for the job at hand are required. USE THE PROPER TOOL FOR THE JOB.
- Conduit work involving active cables requires specialized tools specifically designed to access ducts with active cables.
- Protecting MCI facilities IS EXTREMELY important; however, SAFETY regarding yourself and others is the most important part of any project.

Signature: _____

Release 1.0

NOT FOR CONSTRUCTION

PROJECT:
1812BTLW-PE-MCA-15264-1
HINSDALE, IL

| CLARIFICATION NO. | QUANTITY |
|---|---|
| | |

MCImetro
ACCESS TRANSMISSION SERVICES CORP.
OUTSIDE PLANT CONSTRUCTION
TITLE: 1812BTLW-PE-MCA-15264-1

DATE: 6/16/2022
DESIGNER: LEDCOR GROUP
DRAWN BY: M. NEUENDORFF

REVISIONS

| DATE | DESCRIPTION | INITIAL |
|---|---|---|
| 6/16/22 | JX REVISION | MDN |

EXCEPT AS MAY BE OTHERWISE PROVIDED BY CONTRACT, THESE DRAWINGS AND SPECIFICATIONS SHALL REMAIN THE PROPERTY OF MCI COMMUNICATIONS SERVICES, INC. BOTH BEING ISSUED IN STRICT CONFIDENCE AND SHALL NOT BE REPRODUCED, COPIED OR USED FOR ANY PURPOSE WITHOUT SPECIFIC WRITTEN PERMISSION.

CRAN HUB:
CH BROOKFIELD

PERMIT ID: 15264

SCALE
HORIZONTAL: NA
VERTICAL: NA
MP ____ TO MP ____

SHEET 3 OF 15
FILE: 1812BTLW-PE-MCA-15264-1

## CLARIFICATION NOTES (CONTINUED)

| | | |
|---|---|---|
| 100 | 110 | JACK AND DRY BORE CONDUIT(S) |
| 200 | 210 | PLACE CONDUIT |
| | 212 | PLACE HIGH DENSITY POLYETHYLENE (HDPE) |
| | 213 | ROCK ADDER |
| | 214 | SLURRY BACKFILL ADDER |
| | 215 | EXPOSE CONDUIT |
| | 216 | EXPOSE CONDUIT AND RELOCATE |
| | 217 | EXPOSE CONDUIT AND REPLACE/SUBSTITUTE |
| | 218 | EXPOSE AND REMOVE CONDUIT |
| | 219 | EXPOSE AND REMOVE CONDUIT (ABANDONED) |
| | 220 | CONCRETE ENCASE |
| | 221 | REMOVE CONCRETE ENCASEMENT |
| | 222 | REMOVE CONCRETE CAP |
| | 240 | PLACE HANDHOLE |
| | 244 | REMOVE EXISTING HANDHOLE |
| | 245 | RELOCATE HANHOLE |
| | 246 | REPLACE/SUBSTITUTE HANDHOLE |
| | 247 | EXCAVATE SPLICE PIT |
| | 250 | PLACE MANHOLE |
| | 252 | REMOVE EXISTING MANHOLE |
| | 255 | RELOCATE PRECAST MANHOLE |
| | 256 | REPLACE/SUBSTITUTE PRECAST MANHOLE |
| | 260 | CONSTRUCT WALL |
| | 270 | REMOVE AND RESTORE ASPHALT |
| | 280 | REMOVE AND RESTORE CONCRETE |
| | 281 | REMOVE AND RESTORE SIDEWALK |
| | 282 | REMOVE AND RESTORE CURBING |
| 300 | 310 | ATTACH CONDUIT TO WALL OR STRUCTURE |
| | 315 | DETACH CONDUIT FROM WALL OR STRUCTURE |
| | 320 | CORE BORE |
| | 330 | ATTACH PULL/SPLICE BOX TO WALL OR STRUCTURE |
| 400 | 410 | PULL CABLE |
| | 411 | PULL THROUGH DUCT (INNERDUCT) |
| | 415 | REMOVE CABLE FROM CONDUIT |
| | 420 | REPOSITION ACTIVE CABLE SLACK |
| 500 | 510 | DIRECT BURY CABLE |
| | 515 | EXPOSE DIRECT BURIED CABLE |
| | 516 | EXPOSE DIRECT BURIED CABLE AND RELOCATE |
| | 517 | REMOVE AND DISPOSE OF CABLE |
| | 520 | PLACE AERIAL CABLE |
| | 525 | RELOCATE AERIAL CABLE |
| | 526 | DELASH AERIAL CABLE |
| | 527 | RELASH AERIAL CABLE |
| | 528 | REMOVE AERIAL CABLE |
| | 530 | PLACE POLE/PUSH BRACE |
| | 535 | REMOVE POLE/PUSH BRACE |
| 600 | 610 | JETTING CONDUIT |
| | 620 | EMBEDMENT PLOW |
| | 630 | DIRECTIONAL BORE |
| | 640 | OPEN TRENCH |
| 700 | 710 | PLACE BURIED CABLE MARKERS AND SIGNS/MWCOM WATER CROSSING SIGNS |
| | 711 | PLACE ISOLATOR/PROTECTION SYSTEM AT EXISTING HANDHOLES/MANHOLES |
| | 712 | REMOVE BURIED CABLE MARKER POST/HARDWARE |
| | 714 | REMOVE CONCRETE BURIED CABLE MARKER POST |

### PROJECT CLARIFICATION SUMMARY

| CLARIFICATION NUMBER | CLARIFICATION NUMBER AND ALPHA | DESCRIPTION | QUANTITY | UNIT |
|---|---|---|---|---|
| 200 | 212 | PLACE HIGH DENSITY POLYETHYLENE (HDPE) | 502 | LF |
| 200 | 240 | PLACE HANDHOLE | 1 | EA |
| 600 | 630 | DIRECTIONAL BORE | 497 | LF |
| 600 | 640 | OPEN TRENCH | 5 | LF |

NOT FOR CONSTRUCTION

PROJECT:

1812BTLW-PE-MCA-15264-1

HINSDALE, IL

| CLARIFICATION NO. | QUANTITY |
|---|---|
| 630 | 497 |
| 640 | 5 |
| 212 | 502 |
| 240 | 1 EA |

MCImetro
ACCESS TRANSMISSION SERVICES CORP.

OUTSIDE PLANT CONSTRUCTION

TITLE: 1812BTLW-PE-MCA-15264-1

DATE: 6/16/2022

DESIGNER: LEDCOR GROUP

DRAWN BY: M. NEUENDORFF

REVISIONS

| DATE | DESCRIPTION | INITIAL |
|---|---|---|
| 6/16/22 | JX REVISION | MDN |

EXCEPT AS MAY BE OTHERWISE PROVIDED BY CONTRACT THESE DRAWINGS AND SPECIFICATIONS SHALL REMAIN THE PROPERTY OF MCI COMMUNICATIONS SERVICES, INC. BOTH BEING ISSUED IN STRICT CONFIDENCE AND SHALL NOT BE REPRODUCED, COPIED OR USED FOR ANY PURPOSE WITHOUT SPECIFIC WRITTEN PERMISSION.

CRAN HUB:
CH BROOKFIELD

PERMIT ID: 15264

SCALE

HORIZONTAL: NA

VERTICAL: NA

MP _____ TO MP _____

SHEET 4 OF 15

FILE: 1812BTLW-PE-MCA-15264-1

# SYMBOLS KEY

| | EXISTING | PROPOSED |
|---|---|---|
| BURIED CABLE | F | PROPOSED |
| AERIAL CABLE | A | A |
| SUBMARINE CABLE | SUBM | SUBM |
| FOGWIRE CABLE | FOGW | FOGW |
| DIRECT BURIED HDPE | H | H |
| PVC OR SPLIT PVC CONDUIT | | |
| BSP/GSP OR SPLIT BSP/GSP CONDUIT | | |
| STEEL CASING | | |
| REMOVE AND RESTORE ASPHALT OR CONCRETE (WIDTH AS INDICATED) | 48" | 48" |
| CORE BORE | | |
| JACK AND BORE | | |
| TRENCHING | | |
| FUTURE CABLE | | |
| REMOVE CABLE | R | R |
| TO BE REMOVED OR ABANDONED (SHOWN FOR HDPE) | H | H |
| AERIAL UTILITY (ELECTRIC) | E | E |
| UNDERGROUND UTILITY (TELEPHONE) | T | T |
| MAIN TRACKS | | |
| AUXILLARY TRACKS | | |
| BUILDING | BLDG | BLDG |
| CENTERLINE | CL | CL |
| RIGHT-OF-WAY | ROW | ROW |
| EDGE OF PAVEMENT | EOP | EOP |
| BACK OF CURB | BOC | BOC |
| DIRECTIONAL BORE | DB | DB |
| UNDERGROUND | UG | UG |
| SIDEWALK | SW | SW |
| EXISTING MCI | MCI | MCI |
| DITCH LINE | D/L | D/L |
| TAX DISTRICT | | |
| CITY, COUNTY OR STATE BOUNDARY LINE | | |
| PROPERTY LINE | | |
| FENCE LINE | F/L F/L F/L | F/L F/L F/L |
| GUARDRAIL | | |
| TOP OF SLOPE | | |
| TOE OF SLOPE | | |
| SEWER LINE | SS | SS |
| WATER LINE | W | W |
| STORM DRAIN LINE | SD | SD |
| CITY OF AURORA FIBER | COA FIBER | COA FIBER |
| ELECTRIC LINE | E | E |
| GAS LINE | G | G |

| | EXISTING | PROPOSED |
|---|---|---|
| STEEL MARKER AND SIGN-(A)<br>ALUMINUM "HUB"-STYLE MARKER-(B)<br>FLAT MARKER-(C)<br>TUBULAR MARKER-(D)<br>TUBULAR MARKER, & ISOLATOR PROTECTOR-(E) | STA. VAR. # (A) (B) (C) (D) (E) | STA. VAR. # (A) (B) (C) (D) (E) |
| MILE POST MARKER<br>NOTE<br>DASHED = NOT FOUND IN FIELD | 1 1 | 1 |
| PERMIT TRACKING FORM IDENTIFIER | P.T.F. 187 | P.T.F. 187 |
| ROCK PROBE (DEPTH AS INDICATED) | 42" | 42" |
| UTILITY COVER DEPTH | 42" | 42" |
| HANDHOLE, MANHOLE OR PULLBOX | | |
| POLE | | |
| ANCHOR ONLY | | |
| GUY ONLY | | |
| OVERHEAD GUY (ARROW IN DIRECTION OF PULL) | OHG 92' 10M | OHG 92' 10M |
| ANCHOR AND GUY | | |
| SIDEWALK ANCHOR AND GUY | P.L. | P.L. |
| FOREIGN ANCHOR AND GUY | | |
| PUSH BRACE (EXISTING POLE) | 30'-5-84 PB | 30'-5-84 PB |
| ACCOUNT CODE CHANGE (BURIED TO AERIAL) | A | |
| CULVERT (SIZE AS INDICATED) | 12" | 12" |
| BRIDGE | | |
| RAILROAD SIGNAL CONTROL BOX | | |
| CAUTION NOTE | ACTIVE MCI CAUTION BURIED FIBER OPTIC CABLE | ACTIVE MCI CAUTION AERIAL FIBER OPTIC CABLE |
| CATCH BASIN | | |
| TREES | | |
| STREET LIGHT | | |
| MANHOLE | | |
| FIRE HYD | | |
| STREET SIGN | | |
| STRUCTURE BELOW GROUND | | |
| STRUCTURE ABOVE GROUND | | |
| TRAFFIC LIGHTS W/ EXTENDED ARM | | |
| TRAFFIC LIGHT STUMP | | |
| LAWN BASIN | | |
| VALVE | OBJECTED HEIGHT | |
| WOOD POLE | | |
| GROUND (VGR) | | |

NOT FOR CONSTRUCTION

PROJECT:

1812BTLW-PE-MCA-15264-1

HINSDALE, IL

| CLARIFICATION NO. | QUANTITY |
|---|---|
| | |

MCImetro
ACCESS TRANSMISSION SERVICES CORP.

OUTSIDE PLANT CONSTRUCTION

TITLE: 1812BTLW-PE-MCA-15264-1

DATE: 6/16/2022

DESIGNER: LEDCOR GROUP

DRAWN BY: M. NEUENDORFF

REVISIONS

| DATE | DESCRIPTION | INITIAL |
|---|---|---|
| 6/16/22 | JX REVISION | MDN |
| | | |
| | | |
| | | |
| | | |

EXCEPT AS MAY BE OTHERWISE PROVIDED BY CONTRACT THESE DRAWINGS AND SPECIFICATIONS SHALL REMAIN THE PROPERTY OF MCI COMMUNICATIONS SERVICES, INC. BOTH BEING ISSUED IN STRICT CONFIDENCE AND SHALL NOT BE REPRODUCED, COPIED OR USED FOR ANY PURPOSE WITHOUT SPECIFIC WRITTEN PERMISSION.

CRAN HUB:
CH BROOKFIELD

PERMIT ID: 15264

SCALE

HORIZONTAL: NTS

VERTICAL: NTS

MP _____ TO MP _____

SHEET 5 OF 15

FILE: 1812BTLW-PE-MCA-15264-1

# 17" x 30" x 24" HANDHOLE DETAILS

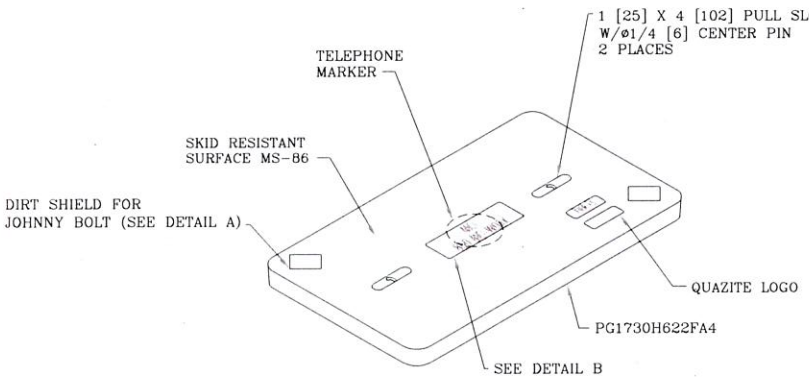


MCI
800-MCI-WORK

DETAIL B

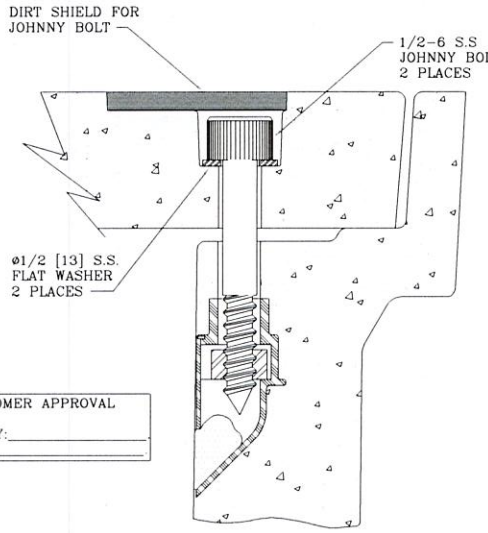


DETAIL A
2 PLACES

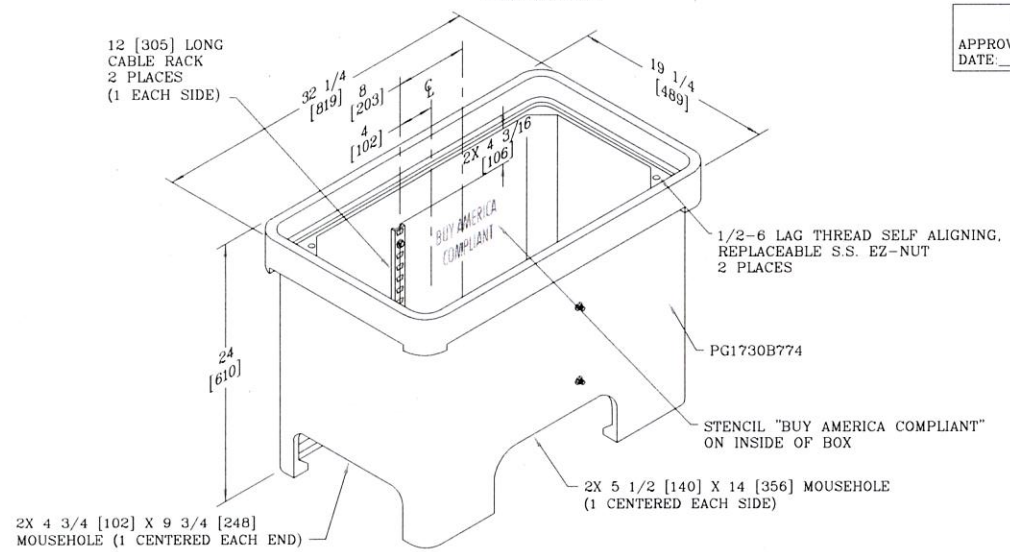


CUSTOMER APPROVAL

APPROVED BY:_____

DATE:_____

NOTES:

1. LOGO TO BE SPECIFIED:_____.
2. THIS ASSEMBLY IS RATED FOR A STATIC DESIGN LOAD OF 15,000 LBS. [66,720 N] OVER A 10 [254] X 10 [254] AREA AND MUST PASS A MINIMUM STATIC TEST LOAD OF 22,500 LBS. [100,080 N].

DIMENSIONS ARE IN INCHES OR MILLIMETERS IN BRACKETS UNLESS OTHERWISE NOTED.

| | BY | DATE | WEIGHT | | LOC |
|---|---|---|---|---|---|
| DRN | JJP | 6/27/17 | 202# 92kg | HUBBELL® 3621 INDUSTRIAL PARK DR LENOIR CITY, TN 37771 800-346-3062 www.quazite.com | LC S |
| CHK | MEJ | 6/28/17 | SCALE NTS | DRAWING DESCRIPTION QUAZITE® ASSEMBLY | REV A |
| ENG | | | SIZE B | | 6/17 |
| APR | | | | | |
| APR | | | | | |
| PROJECT NUMBER 118254 | | | | SHEET 1 OF 1 | DRAWING NUMBER PG1730Z752FA4 |

NOT FOR CONSTRUCTION

PROJECT:

1812BTLW-PE-MCA-15264-1

HINSDALE, IL

| CLARIFICATION NO. | QUANTITY |
|---|---|
| | |

MCImetro
ACCESS TRANSMISSION SERVICES CORP.

OUTSIDE PLANT CONSTRUCTION

TITLE: 1812BTLW-PE-MCA-15264-1

DATE: 6/16/2022

DESIGNER: LEDCOR GROUP

DRAWN BY: M. NEUENDORFF

REVISIONS

| DATE | DESCRIPTION | INITIAL |
|---|---|---|
| 6/16/22 | JX REVISION | MDN |

EXCEPT AS MAY BE OTHERWISE PROVIDED BY CONTRACT, THESE DRAWINGS AND SPECIFICATIONS SHALL REMAIN THE PROPERTY OF MCI COMMUNICATIONS SERVICES, INC. BOTH BEING ISSUED IN STRICT CONFIDENCE AND SHALL NOT BE REPRODUCED, COPIED, OR USED FOR ANY PURPOSE WITHOUT SPECIFIC WRITTEN PERMISSION.

CRAN HUB:
CH BROOKFIELD

PERMIT ID: 15264

SCALE

HORIZONTAL: NTS

VERTICAL: NTS

MP ____ TO MP ____

SHEET 6 OF 15

FILE: 1812BTLW-PE-MCA-15264-1

## TYPICAL PAVEMENT RESTORATION FOR SERVICE CONNECTIONS AND UTLITY CROSSINGS

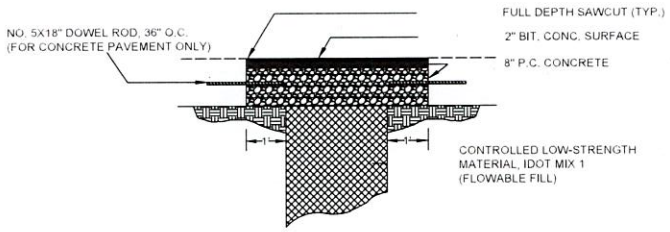


FOR PAVEMENT WITH AGGREGATE BASE AND BITUMINOUS SURFACE
OR
CONCRETE PAVEMENT WITH BITUMINOUS OVERLAY

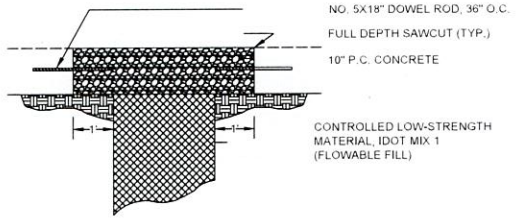


FOR CONCRETE PAVEMENT

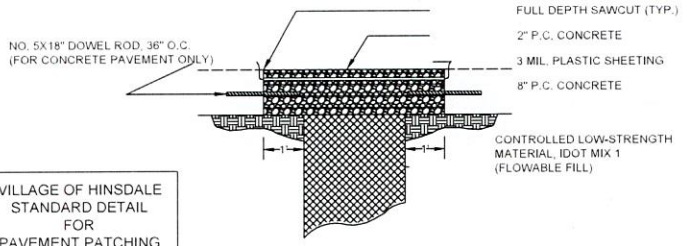


FOR WINTER TEMPORARY

CONTRACTOR MUST CALL FOR AN INSPECTION PRIOR TO PLACING THE FLOWABLE FILL AND PRIOR TO PLACING THE ASPHALT/CONCRETE

VILLAGE OF HINSDALE
STANDARD DETAIL
FOR
PAVEMENT PATCHING
SHEET 4

| | |
|---|---|
| REV | |
| DATE | |
| FILE | |

**PUBLIC UTILITY NOTE:**
CONTRACTOR SHALL NOTIFY ALL PUBLIC UTILITY COMPANIES (GAS, ELECTRIC, TELEPHONE, SEWER, WATER, ETC) PRIOR TO COMMENCING ANY CONSTRUCTION.
THESE COMPANIES WILL LOCATE, ON THE GROUND, THE LOCATION OF ALL CONDUITS, DUCTS, UNDERGROUND PIPING, ETC., ADJOINING & CROSSING PROPOSED CONSTRUCTION.

## TYPICAL DETAIL

DIRECTIONAL BORE CROSS SECTION
1-2" HDPE AT 36" DEPTH

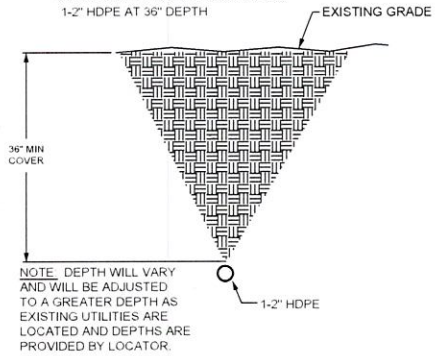


NOTE: DEPTH WILL VARY AND WILL BE ADJUSTED TO A GREATER DEPTH AS EXISTING UTILITIES ARE LOCATED AND DEPTHS ARE PROVIDED BY LOCATOR.

## TYPICAL DETAIL

TRENCH AND PLACE CONDUIT
1-2" HDPE AT 36" DEPTH

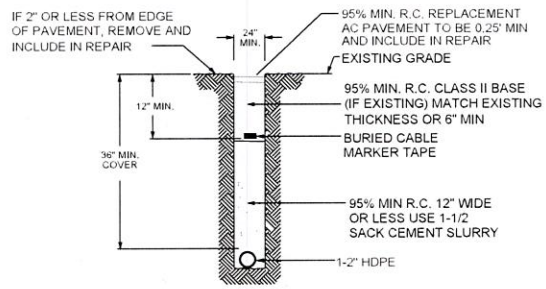


ADDITIONAL NOTES:

1. EXCEPT AS OTHERWISE NOTED, CONTRACTOR SHALL MAINTAIN A MINIMUM OF 24 INCHES OF SEPARATION FROM EXISTING UTILITIES.
2. CONTRACTOR SHALL POTHOLE EACH UTILITY TO DETERMINE SIZE, LOCATION, AND DEPTH PRIOR TO CROSSING.
3. CONTRACTOR IS CAUTIONED TO PROTECT SEWER MANHOLES, CATCH BASINS, LATERALS AND INLETS.
4. CONTRACTOR WILL PROVIDE BARRICADING TO INSURE CORRECT TRAFFIC CONTROL WHILE MAINTAINING VEHICULAR TRAFFIC AT ALL TIMES.
5. RESTORATION TO BE IN COMPLIANCE WITH MCI AND APPLICABLE PERMITTING AGENCIES.
6. BONDING AND GROUNDING PER NESC.
7. ALL SANITARY SERVICE LINES MUST BE CAMERA INSPECTED UPON COMPLETION OF CABLE INSTALLATION TO INSURE NO DAMAGES.

NOT FOR CONSTRUCTION

PROJECT:
1812BTLW-PE-MCA-15264-1
HINSDALE, IL

| CLARIFICATION NO. | QUANTITY |
|---|---|
| | |

MCImetro
ACCESS TRANSMISSION SERVICES CORP.
OUTSIDE PLANT CONSTRUCTION
TITLE: 1812BTLW-PE-MCA-15264-1

DATE: 6/16/2022
DESIGNER: LEDCOR GROUP
DRAWN BY: M. NEUENDORFF

REVISIONS

| DATE | DESCRIPTION | INITIAL |
|---|---|---|
| 6/16/22 | JX REVISION | MUN |

EXCEPT AS MAY BE OTHERWISE PROVIDED BY CONTRACT, THESE DRAWINGS AND SPECIFICATIONS SHALL REMAIN THE PROPERTY OF MCI COMMUNICATIONS SERVICES, INC. BOTH BEING ISSUED IN STRICT CONFIDENCE AND SHALL NOT BE REPRODUCED, COPIED OR USED FOR ANY PURPOSE, WITHOUT SPECIFIC WRITTEN PERMISSION.

CRAN HUB:
CH BROOKFIELD

PERMIT ID: 15264

SCALE
HORIZONTAL: NTS
VERTICAL: NTS
MP ____ TO MP ____
SHEET 7 OF 15
FILE: 1812BTLW-PE-MCA-15264-1

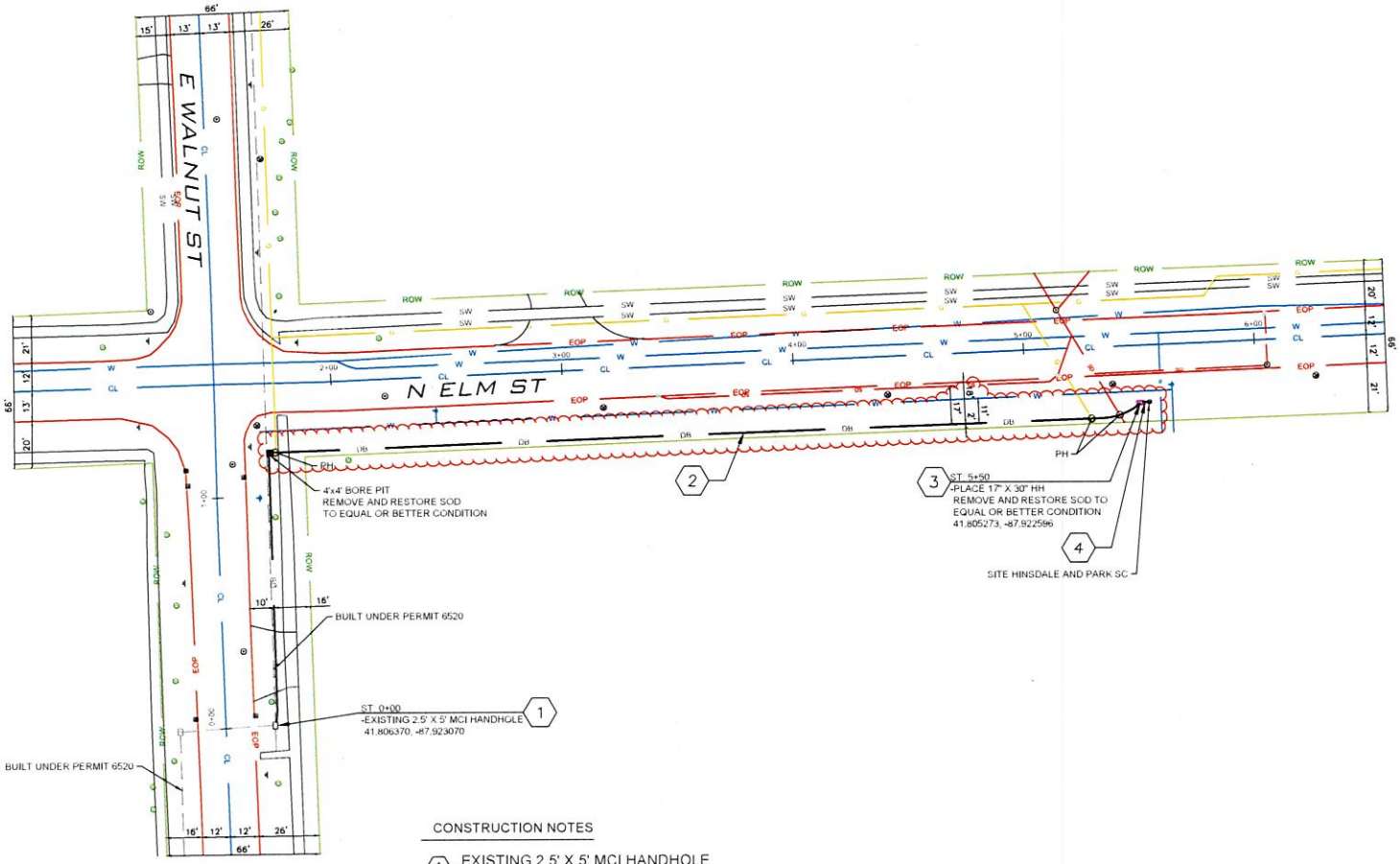


## CONSTRUCTION NOTES

1. EXISTING 2.5' X 5' MCI HANDHOLE 41.806370, -87.923070
2. DIRECTIONAL BORE 497' (CODE 630)(CODE 212)
3. PL. 17" X 30" HANDHOLE (CODE 240)
4. OPEN TRENCH 5' (CODE 640)(CODE 212)

SEE SHEETS 6-7

- ADDITIONAL NOTES
- PUBLIC UTILITY NOTES
- BORE DETAILS
- TRENCH DETAILS
- HANDHOLE DETAILS

0' 1/2" 1"
0' 25' 50'
SCALE

NORTH

NOT FOR CONSTRUCTION

PROJECT:

1812BTLW-PE-MCA-15264-1

HINSDALE, IL

| CLARIFICATION NO. | QUANTITY |
|---|---|
| 630 | 497' |
| 640 | 5' |
| 212 | 502' |
| 240 | 1 EA |

MCImetro
ACCESS TRANSMISSION SERVICES CORP.

OUTSIDE PLANT CONSTRUCTION

TITLE: 1812BTLW-PE-MCA-15264-1

DATE: 6/16/2022

DESIGNER: LEDCOR GROUP

DRAWN BY: M. NEUENDORFF

REVISIONS

| DATE | DESCRIPTION | INITIAL |
|---|---|---|
| 6/16/22 | JX REVISION | MDN |

EXCEPT AS MAY BE OTHERWISE PROVIDED BY CONTRACT, THESE DRAWINGS AND SPECIFICATIONS SHALL REMAIN THE PROPERTY OF MCI COMMUNICATIONS SERVICES, INC. BOTH BEING ISSUED IN DIRECT CONFIDENCE AND SHALL NOT BE REPRODUCED, COPIED OR USED FOR ANY PURPOSE WITHOUT SPECIFIC WRITTEN PERMISSION.

CRAN HUB:
CH BROOKFIELD

PERMIT ID: 15264

SCALE

HORIZONTAL: 1"=50'

VERTICAL: 1"=50'

MP _____ TO MP _____

SHEET 8 OF 15

FILE: 1812BTLW-PE-MCA-15264-1

Call Before You Dig
JULIE ILLINOIS ONE-CALL SYSTEM
800.892.0123

LEDCOR GROUP

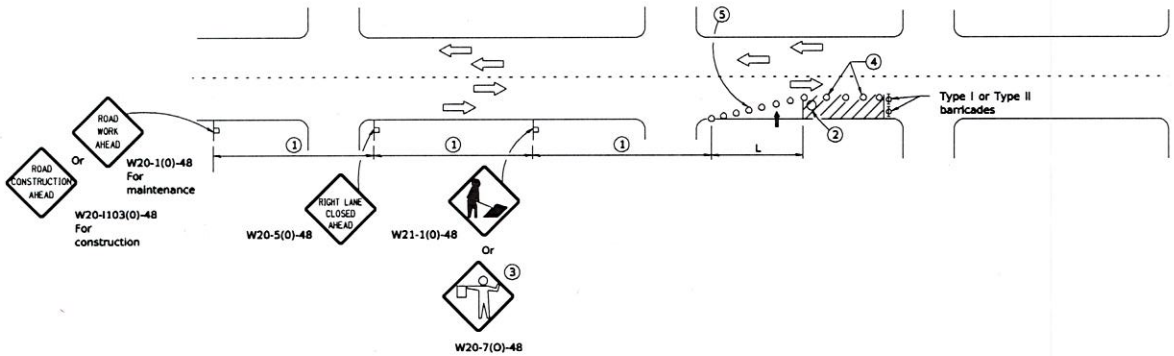


| SIGN SPACING | |
|---|---|
| Posted Speed | Sign Spacing |
| 55 | 500' (150 m) |
| 50-45 | 350' (100 m) |
| <45 | 200' (60 m) |

## SYMBOLS

- Arrow board
- Cone, drum or barricade
- Sign on portable or permanent support
- Work area
- Barricade or drum with flashing light
- Flagger with traffic control sign.

1. Refer to SIGN SPACING TABLE for distances.
2. Required for speeds > 40 mph.
3. Use flagger sign only when flagger is present.
4. Cones at 25' (8 m) centers for 250' (75 m). Additional cones may be placed at 50' (15 m) centers. When drums or Type I or Type II barricades are used, the interval between devices may be doubled.
5. Cones, drums or barricades at 20' (6 m) centers in taper.

## GENERAL NOTES

This Standard is used where at any time, day or night, any vehicle, equipment, workers or their activities encroach on the pavement requiring the closure of one traffic lane in an Urban area.

Calculate L as follows:

| SPEED LIMIT | FORMULAS English | FORMULAS (Metric) |
|---|---|---|
| 40 mph (70 km/h) or less: | $L=\frac{WS^2}{60}$ | $L=\frac{WS^2}{150}$ |
| 45 mph (80 km/h) or greater: | L=(W)(S) | L=0.65(W)(S) |

W = Width of offset in feet (meters).

S = Normal posted speed mph (km/h).

All dimensions are in inches (millimeters) unless otherwise shown.

| DATE | REVISIONS |
|---|---|
| 1-1-15 | Renamed standard. Moved |
| | case on Sheet 2 to new |
| | Highway Standard. |
| 1-1-14 | Revised workers sign |
| | number to agree with |
| | current MUTCD. |

# URBAN SINGLE LANE CLOSURE, MULTILANE, 2W WITH MOUNTABLE MEDIAN

STANDARD 701606-10

Illinois Department of Transportation

PASSED January 1, 2015
ENGINEER OF SAFETY ENGINEERING

APPROVED January 1, 2015
ENGINEER OF DESIGN AND ENVIRONMENT

ISSUED 1-1-07

NOT FOR CONSTRUCTION

PROJECT:
1812BTLW-PE-MCA-15264-1
HINSDALE, IL

| CLARIFICATION NO. | QUANTITY |
|---|---|
| | |

MCImetro ACCESS TRANSMISSION SERVICES CORP.
OUTSIDE PLANT CONSTRUCTION
TITLE: 1812BTLW-PE-MCA-15264-1

DATE: 6/16/2022
DESIGNER: LEDCOR GROUP
DRAWN BY: M. NEUENDORFF

REVISIONS

| DATE | DESCRIPTION | INITIAL |
|---|---|---|
| 6/16/22 | JX REVISION | MDN |

EXCEPT AS MAY BE OTHERWISE PROVIDED BY CONTRACT, THESE DRAWINGS AND SPECIFICATIONS SHALL REMAIN THE PROPERTY OF MCI COMMUNICATIONS SERVICES, INC. BOTH BEING ISSUED IN STRICT CONFIDENCE AND SHALL NOT BE REPRODUCED, COPIED, OR USED FOR ANY PURPOSE WITHOUT SPECIFIC WRITTEN PERMISSION.

CRAN HUB:
CH BROOKFIELD

PERMIT ID: 15264

SCALE
HORIZONTAL: NTS
VERTICAL: NTS
MP ____ TO MP ____

SHEET 9 OF 15
FILE: 1812BTLW-PE-MCA-15264-1

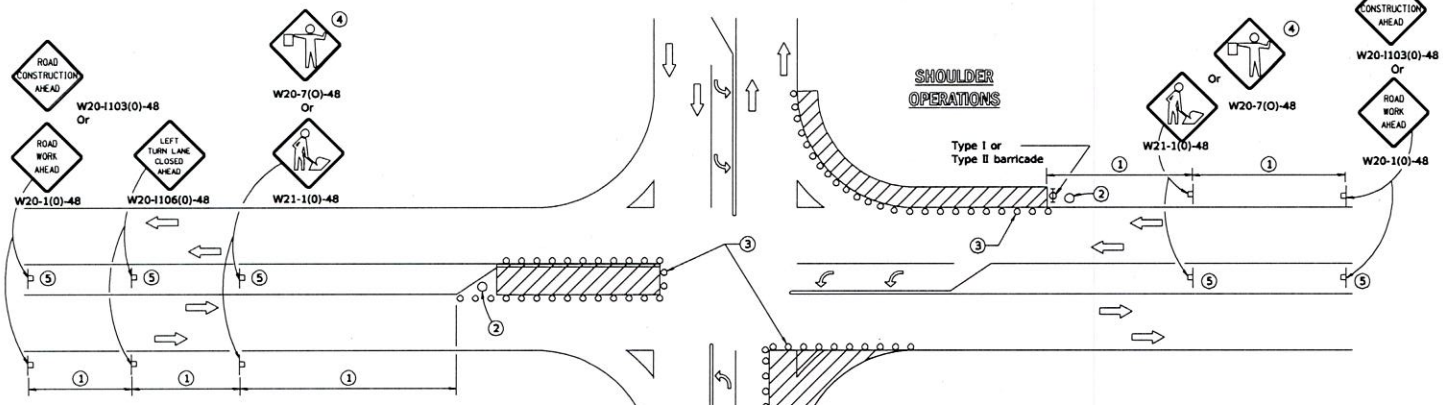


## LEFT TURN LANE OR CENTER MEDIAN OPERATIONS

1. Refer to SIGN SPACING TABLE for distance.
2. Required for speed > 40 mph.
3. Cones at 25' (8 m) centers for 250' (75 m). Additional cones may be placed at 50' (15 m) centers. When drums or Type I or Type II barricades are used, the interval between devices may be doubled.
4. Use flagger sign only when flagger is present.
5. Omit this sign when median is less than 10' (3 m) or for bi-directional turn lanes.
6. Cones, drums or barricades at 20' (6 m) centers in taper.
7. Advanced arrow board required for speeds > 45 mph.
8. Three Type II barricades, drums or vertical barricades at 50' (15 m) centers.

| SIGN SPACING | |
|---|---|
| Posted Speed | Sign Spacing |
| 55 | 500' (150 m) |
| 50-45 | 350' (100 m) |
| <45 | 200' (60 m) |

## SYMBOLS

- Work area
- Cone, drum or barricade
- Sign on portable or permanent support
- Arrow board
- Barricade or drum with flashing light
- Flagger with traffic control sign

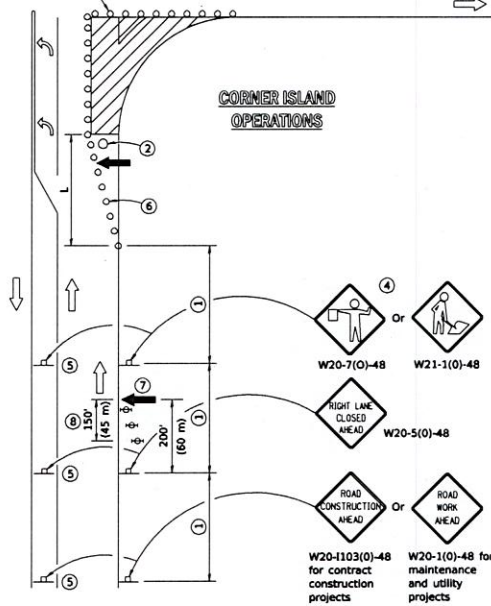


## GENERAL NOTES

This Standard is used where at any time, day or night, any vehicle, equipment, workers or their activities encroach on the pavement during shoulder operations or where construction requires lane closures in an urban area.

Calculate L as follows:

| SPEED LIMIT | FORMULAS English | FORMULAS (Metric) |
|---|---|---|
| 40 mph (70 km/h) or less: | $L=\frac{WS^2}{60}$ | $L=\frac{WS^2}{150}$ |
| 45 mph (80 km/h) or greater: | L=(W)(S) | L=0.65(W)(S) |

W = Width of offset in feet (meters).

S = Normal posted speed mph (km/h).

All dimensions are in inches (millimeters) unless otherwise shown.

| DATE | REVISIONS |
|---|---|
| 4-1-16 | Corrected sign number for |
| | LEFT TURN LANE CLOSED |
| | AHEAD. |
| 1-1-14 | Added devices at arrow |
| | board upstream from taper. |
| | Rev. workers sign number. |

# URBAN LANE CLOSURE, MULTILANE INTERSECTION

STANDARD 701701-10

Illinois Department of Transportation

PASSED April 1, 2016
ENGINEER OF SAFETY ENGINEERING

APPROVED April 1, 2016
ENGINEER OF DESIGN AND ENVIRONMENT

ADOPTED 1-1-07

NOT FOR CONSTRUCTION

PROJECT
1812BTLW-PE-MCA-15264-1
HINSDALE, IL

| CLARIFICATION NO. | QUANTITY |
|---|---|

MCImetro
ACCESS TRANSMISSION SERVICES CORP.
OUTSIDE PLANT CONSTRUCTION
TITLE: 1812BTLW-PE-MCA-15264-1

DATE: 6/16/2022
DESIGNER: LEDCOR GROUP
DRAWN BY: M. NEUENDORFF

REVISIONS

| DATE | DESCRIPTION | INITIAL |
|---|---|---|
| 6/16/22 | JA REVISION | MJN |

EXCEPT AS MAY BE OTHERWISE PROVIDED BY CONTRACT THESE DRAWINGS AND SPECIFICATIONS SHALL REMAIN THE PROPERTY OF MCI COMMUNICATIONS SERVICES, INC. BOTH BEING ISSUED IN STRICT CONFIDENCE AND SHALL NOT BE REPRODUCED, COPIED OR USED FOR ANY PURPOSE WITHOUT SPECIFIC WRITTEN PERMISSION.

CRAN HUB:
CH BROOKFIELD

PERMIT ID: 15264

SCALE
HORIZONTAL: NTS
VERTICAL: NTS
MP ____ TO MP ____
SHEET 10 OF 15
FILE: 1812BTLW-PE-MCA-15264-1

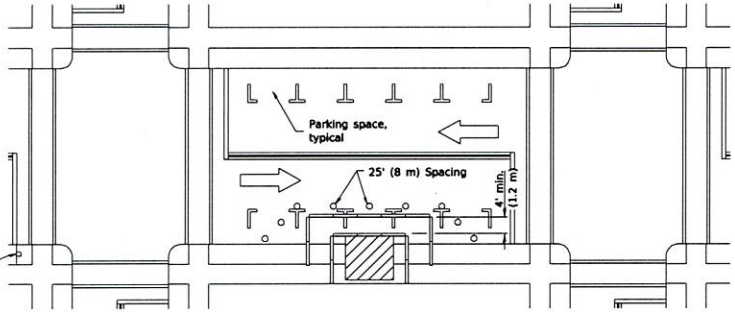


① ROAD CONSTRUCTION AHEAD — W20-I103(0)-48 for contract construction projects

Or

① ROAD WORK AHEAD — W20-1(0)-48 for maintenance and utility projects

## SIDEWALK DIVERSION

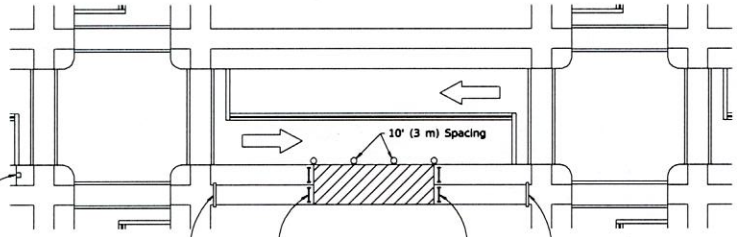


① ROAD CONSTRUCTION AHEAD — W20-I103(0)-48 for contract construction projects

Or

① ROAD WORK AHEAD — W20-1(0)-48 for maintenance and utility projects

SIDEWALK CLOSED — R11-I101-2418

SIDEWALK CLOSED / USE OTHER SIDE — R11-I102-2430

SIDEWALK CLOSED / USE OTHER SIDE — R11-I102-2430

## SIDEWALK CLOSURE

① Omit whenever duplicated by road work traffic control.

## SYMBOLS

- Work area
- Sign on portable or permanent support
- Barricade or drum
- Cone, drum or barricade
- Type III barricade
- Detectable pedestrian channelizing barricade

## GENERAL NOTES

This Standard is used where, at any time, pedestrian traffic must be rerouted due to work being performed.

This Standard must be used in conjunction with other Traffic Control & Protection Standards when roadway traffic is affected.

Temporary facilities shall be detectable and accessible.

The temporary pedestrian facilities shall be provided on the same side of the closed facilities whenever possible.

The SIDEWALK CLOSED / USE OTHER SIDE sign shall be placed at the nearest crosswalk or intersection to each end of the closure. Where the closure occurs at a corner, the signs shall be erected on the corners across the street from the closure. The SIDEWALK CLOSED signs shall be used at the ends of the actual closures.

Type III barricades and R11-2-4830 signs shall be positioned as shown in "ROAD CLOSED TO ALL TRAFFIC" detail on Standard 701901.

All dimensions are in inches (millimeters) unless otherwise shown.

| DATE | REVISIONS |
|---|---|
| 4-1-16 | Omitted orange safety fence |
| | from standard as this is |
| | covered in the std. spec. |
| 1-1-12 | Added SIDEWALK DIVERSION. |
| | Modified appearance of |
| | plan views. Renamed Std. |

# SIDEWALK, CORNER OR CROSSWALK CLOSURE

(Sheet 1 of 2)

STANDARD 701801-06

Illinois Department of Transportation

PASSED April 1, 2016
ENGINEER OF SAFETY ENGINEERING

APPROVED April 1, 2016
ENGINEER OF DESIGN AND ENVIRONMENT

ISSUED 1-1-87

NOT FOR CONSTRUCTION

PROJECT:
1812BTLW-PE-MCA-15264-1
HINSDALE, IL

| CLARIFICATION NO. | QUANTITY |
|---|---|
| | |

MCImetro
ACCESS TRANSMISSION SERVICES CORP.
OUTSIDE PLANT CONSTRUCTION
TITLE: 1812BTLW-PE-MCA-15264-1

DATE: 6/16/2022
DESIGNER: LEDCOR GROUP
DRAWN BY: M. NEUENDORFF

REVISIONS

| DATE | DESCRIPTION | INITIAL |
|---|---|---|
| 6/16/22 | JX REVISION | MDN |

EXCEPT AS MAY BE OTHERWISE PROVIDED BY CONTRACT, THESE DRAWINGS AND SPECIFICATIONS SHALL REMAIN THE PROPERTY OF MCI COMMUNICATIONS SERVICES, INC., BOTH BEING ISSUED IN STRICT CONFIDENCE AND SHALL NOT BE REPRODUCED, COPIED OR USED FOR ANY PURPOSE WITHOUT SPECIFIC WRITTEN PERMISSION.

CRAN HUB:
CH BROOKFIELD

PERMIT ID: 15264

SCALE
HORIZONTAL: NTS
VERTICAL: NTS
MP ____ TO MP ____

SHEET 11 OF 15

FILE: 1812BTLW-PE-MCA-15264-1

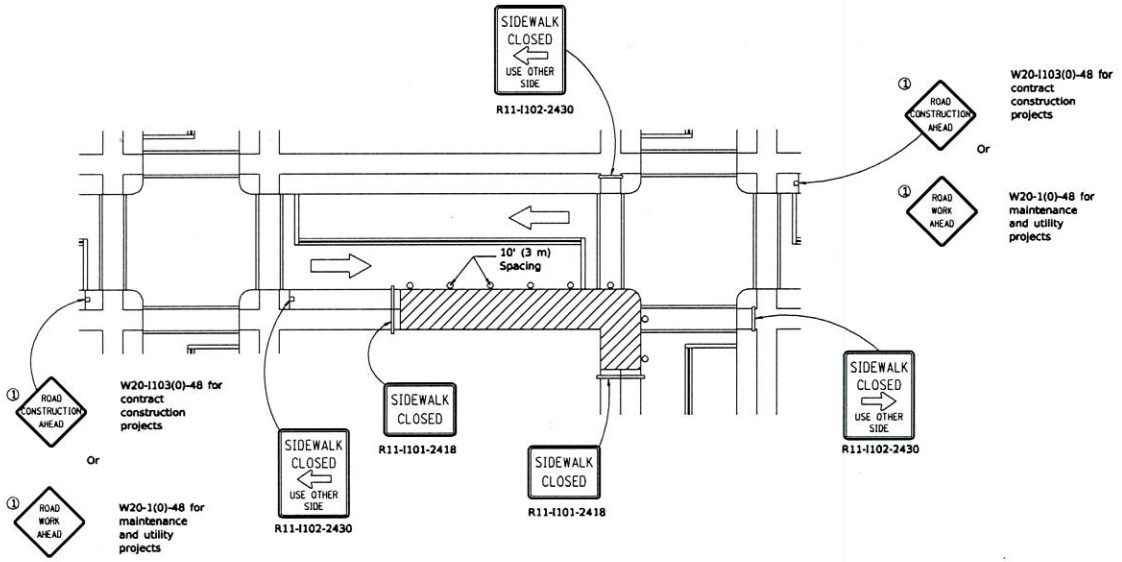


CORNER CLOSURE

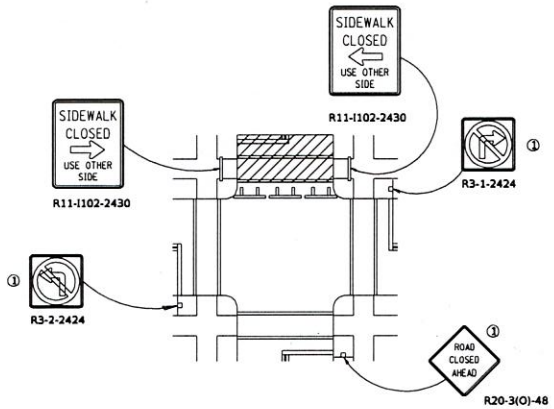


CROSSWALK CLOSURE

Illinois Department of Transportation

PASSED April 1, 2016
ENGINEER OF SAFETY ENGINEERING

APPROVED April 1, 2016
ENGINEER OF DESIGN AND ENVIRONMENT

ISSUED 1-1-97

# SIDEWALK, CORNER OR CROSSWALK CLOSURE

(Sheet 2 of 2)

STANDARD 701801-06

NOT FOR CONSTRUCTION

PROJECT:

1812BTLW-PE-MCA-15264-1

HINSDALE, IL

| CLARIFICATION NO. | QUANTITY |
|---|---|
| | |

MCImetro
ACCESS TRANSMISSION SERVICES CORP.

OUTSIDE PLANT CONSTRUCTION

TITLE: 1812BTLW-PE-MCA-15264-1

DATE: 6/16/2022

DESIGNER: LEDCOR GROUP

DRAWN BY: M. NEUENDORFF

REVISIONS

| DATE | DESCRIPTION | INITIAL |
|---|---|---|
| 6/16/22 | JX REVISION | MDN |

EXCEPT AS MAY BE OTHERWISE PROVIDED BY CONTRACT THESE DRAWINGS AND SPECIFICATIONS SHALL REMAIN THE PROPERTY OF MCI COMMUNICATIONS SERVICES, INC. BOTH BEING ISSUED IN STRICT CONFIDENCE AND SHALL NOT BE REPRODUCED, COPIED OR USED FOR ANY PURPOSE WITHOUT SPECIFIC WRITTEN PERMISSION.

CRAN HUB:
CH BROOKFIELD

PERMIT ID: 15264

SCALE

HORIZONTAL: NTS

VERTICAL: NTS

MP _____ TO MP _____

SHEET 12 OF 15

FILE: 1812BTLW-PE-MCA-15264-1

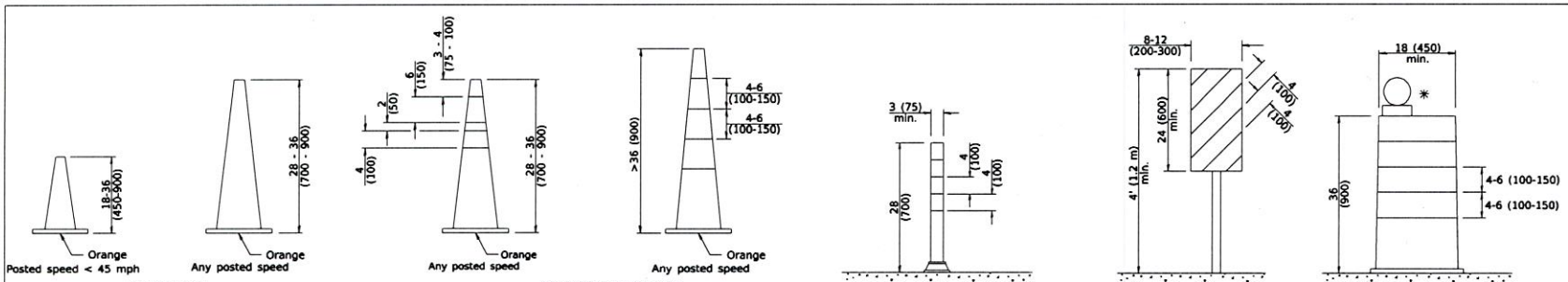


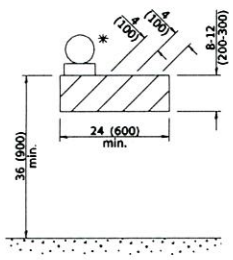


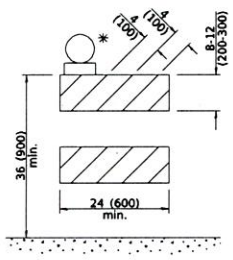


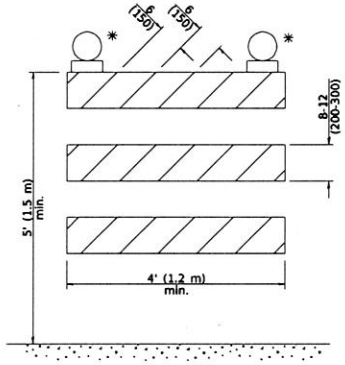


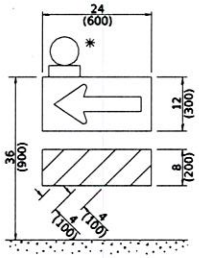


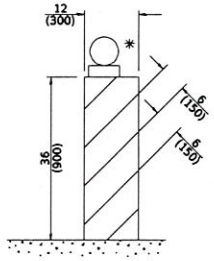


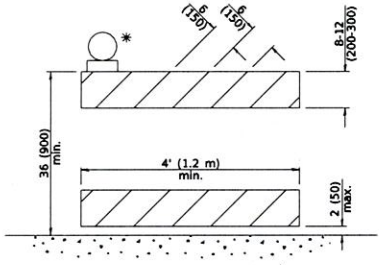


✱ Warning lights (if required)

## GENERAL NOTES

All heights shown shall be measured above the pavement surface.

All dimensions are in inches (millimeters) unless otherwise shown.

| DATE | REVISIONS |
|---|---|
| 1-1-19 | Revised cone usage and added cones >36" (900 m) height. |
| 1-1-18 | Revised END WORK ZONE SPEED LIMIT sign from orange to white background. |

# TRAFFIC CONTROL DEVICES

(Sheet 1 of 3)

STANDARD 701901-08

Illinois Department of Transportation

APPROVED January 1, 2019
ENGINEER OF SAFETY PROG. AND ENGINEERING

APPROVED January 1, 2019
ENGINEER OF DESIGN AND ENVIRONMENT

STANDARD 1-1-13

NOT FOR CONSTRUCTION

PROJECT:
1812BTLW-PE-MCA-15264-1
HINSDALE, IL

| CLARIFICATION NO. | QUANTITY |
|---|---|
| | |

MCImetro
ACCESS TRANSMISSION SERVICES CORP.
OUTSIDE PLANT CONSTRUCTION
TITLE: 1812BTLW-PE-MCA-15264-1

DATE: 6/16/2022
DESIGNER: LEDCOR GROUP
DRAWN BY: M. NEUENDORFF

REVISIONS

| DATE | DESCRIPTION | INITIAL |
|---|---|---|
| 6/16/22 | JX REVISION | MDN |

EXCEPT AS MAY BE OTHERWISE PROVIDED BY CONTRACT THESE DRAWINGS AND SPECIFICATIONS SHALL REMAIN THE PROPERTY OF MCI COMMUNICATIONS SERVICES, INC., BOTH BEING ISSUED IN STRICT CONFIDENCE AND SHALL NOT BE REPRODUCED, COPIED OR USED FOR ANY PURPOSE WITHOUT SPECIFIC WRITTEN PERMISSION.

CRAN HUB:
CH BROOKFIELD

PERMIT ID: 15264

SCALE
HORIZONTAL: NTS
VERTICAL: NTS
MP _____ TO MP _____

SHEET 13 OF 15

FILE: 1812BTLW-PE-MCA-15264-1

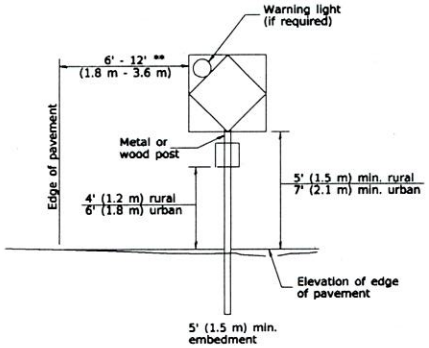


## POST MOUNTED SIGNS

** When curb or paved shoulder are present this dimension shall be 24 (600) to the face of curb or 6' (1.8 m) to the outside edge of the paved shoulder.

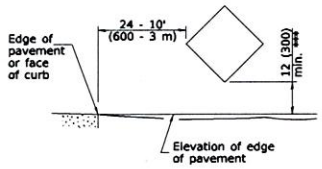


## SIGNS ON TEMPORARY SUPPORTS

*** When work operations exceed four days, this dimension shall be 5' (1.5 m) min. If located behind other devices, the height shall be sufficient to be seen completely above the devices.

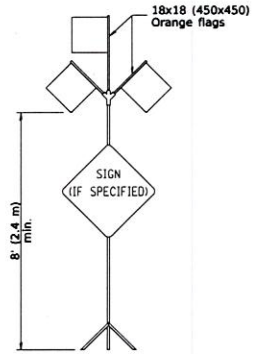


## HIGH LEVEL WARNING DEVICE

W12-I103-4848

## WIDTH RESTRICTION SIGN

XX'-XX" width and X miles are variable.

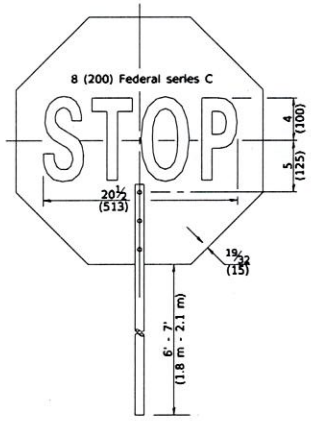


FRONT SIDE

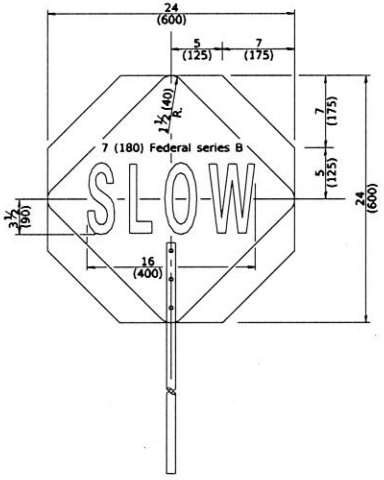


REVERSE SIDE

## FLAGGER TRAFFIC CONTROL SIGN

| ROAD CONSTRUCTION NEXT X MILES | END CONSTRUCTION |
|---|---|
| G20-I104(0)-6036 | G20-I105(0)-6024 |

This signing is required for all projects 2 miles (3200 m) or more in length.

ROAD CONSTRUCTION NEXT X MILES sign shall be placed 500' (150 m) in advance of project limits.

END CONSTRUCTION sign shall be erected at the end of the job unless another job is within 2 miles (3200 m).

Dual sign displays shall be utilized on multi-lane highways.

## WORK LIMIT SIGNING

W21-III5(0)-3618

R2-1-3648

R10-I108p-3618 ****

R2-I106p-3618

Sign assembly as shown on Standards or as allowed by District Operations.

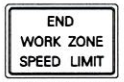


G20-I103-6036

This sign shall be used when the above sign assembly is used.

## HIGHWAY CONSTRUCTION SPEED ZONE SIGNS

**** R10-I108p shall only be used along roadways under the jurisdiction of the State.

Illinois Department of Transportation

APPROVED January 1, 2019
ENGINEER OF SAFETY PROG. AND ENGINEERING

APPROVED January 1, 2019
ENGINEER OF DESIGN AND ENVIRONMENT

ISSUED 1-1-13

# TRAFFIC CONTROL DEVICES

(Sheet 2 of 3)

STANDARD 701901-08

NOT FOR CONSTRUCTION

PROJECT: 1812BTLW-PE-MCA-15264-1

HINSDALE, IL

| CLARIFICATION NO. | QUANTITY |
|---|---|
| | |

MCImetro
ACCESS TRANSMISSION SERVICES CORP.
OUTSIDE PLANT CONSTRUCTION
TITLE: 1812BTLW-PE-MCA-15264-1

DATE: 6/16/2022
DESIGNER: LEDCOR GROUP
DRAWN BY: M. NEUENDORFF

REVISIONS

| DATE | DESCRIPTION | INITIAL |
|---|---|---|
| 6/16/22 | JX REVISION | MDN |

EXCEPT AS MAY BE OTHERWISE PROVIDED BY CONTRACT THESE DRAWINGS AND SPECIFICATIONS SHALL REMAIN THE PROPERTY OF MCI COMMUNICATIONS SERVICES, INC., BOTH BEING ISSUED IN STRICT CONFIDENCE AND SHALL NOT BE REPRODUCED, COPIED, OR USED FOR ANY PURPOSE WITHOUT SPECIFIC WRITTEN PERMISSION.

CRAN HUB: CH BROOKFIELD

PERMIT ID: 15264

SCALE

HORIZONTAL: NTS

VERTICAL: NTS

MP _____ TO MP _____

SHEET 14 OF 15

FILE: 1812BTLW-PE-MCA-15264-1

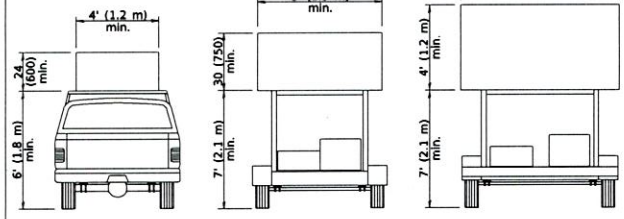


TYPE A ROOF MOUNTED

TYPE B ROOF OR TRAILER MOUNTED

TYPE C TRAILER MOUNTED

ARROW BOARDS

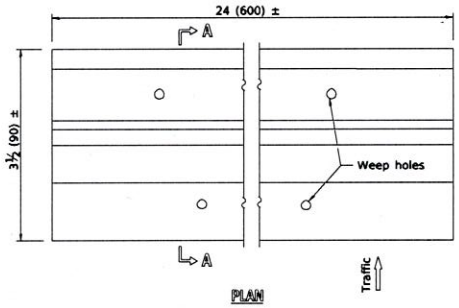


PLAN

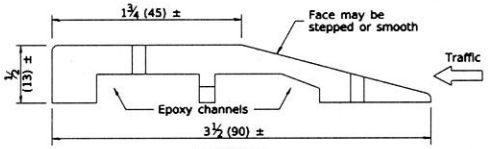


SECTION A-A

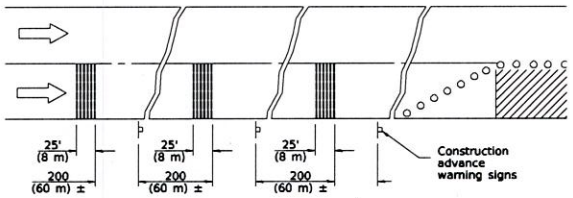


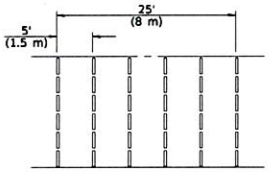


TYPICAL INSTALLATION

TEMPORARY RUMBLE STRIPS

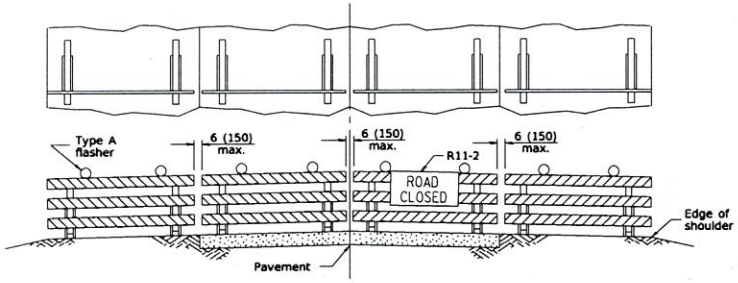


ROAD CLOSED TO ALL TRAFFIC

Reflectorized striping may be omitted on the back side of the barricades. If a Type III barricade with an attached sign panel which meets NCHRP 350 is not available, the sign may be mounted on an NCHRP 350 temporary sign support directly in front of the barricade.

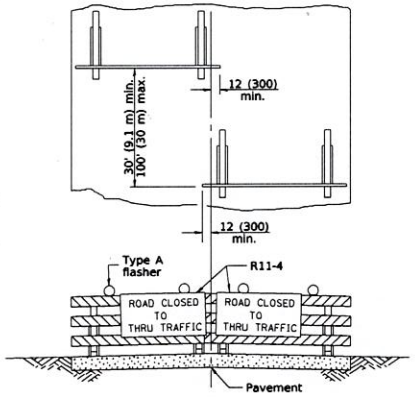


ROAD CLOSED TO THRU TRAFFIC

Reflectorized striping shall appear on both sides of the barricades. If a Type III barricade with an attached sign panel which meets NCHRP 350 is not available, the signs may be mounted on NCHRP 350 temporary sign supports directly in front of the barricade.

TYPICAL APPLICATIONS OF TYPE III BARRICADES CLOSING A ROAD

Illinois Department of Transportation

APPROVED January 1, 2019
ENGINEER OF SAFETY PROG. AND ENGINEERING

APPROVED January 1, 2019
ENGINEER OF DESIGN AND ENVIRONMENT

701901 1-1-13

# TRAFFIC CONTROL DEVICES

(Sheet 3 of 3)

STANDARD 701901-08

NOT FOR CONSTRUCTION

PROJECT:
1812BTLW-PE-MCA-15264-1
HINSDALE, IL

| CLARIFICATION NO. | QUANTITY |
|---|---|
| | |

MCImetro
ACCESS TRANSMISSION SERVICES CORP.
OUTSIDE PLANT CONSTRUCTION
TITLE: 1812BTLW-PE-MCA-15264-1

DATE: 6/16/2022
DESIGNER: LEDCOR GROUP
DRAWN BY: M. NEUENDORFF

REVISIONS

| DATE | DESCRIPTION | INITIAL |
|---|---|---|
| 6/16/22 | JR REVISION | MDN |

EXCEPT AS MAY BE OTHERWISE PROVIDED BY CONTRACT THESE DRAWINGS AND SPECIFICATIONS SHALL REMAIN THE PROPERTY OF MCI COMMUNICATIONS SERVICES, INC. BOTH BEING ISSUED IN STRICT CONFIDENCE AND SHALL NOT BE REPRODUCED, COPIED OR USED FOR ANY PURPOSE WITHOUT SPECIFIC WRITTEN PERMISSION.

CRAN HUB:
CH BROOKFIELD

PERMIT ID: 15264

SCALE
HORIZONTAL: NTS
VERTICAL: NTS
MP _____ TO MP _____

SHEET 15 OF 15
FILE: 1812BTLW-PE-MCA-15264-1