VILLAGE OF Hinsdale Est. 1873

Village of Hinsdale
19 E. Chicago Avenue
Hinsdale, IL 60521-3489
(630)789-7000
Village Website: www.villageofhinsdale.org

PUBLIC SERVICES UTILITY PERMIT APPLICATION - Permit Fee of $100.00

Date of Application: 03/08/23 Permit No: TM - 0001 Permit Expiration Date: 04/30/23

Utility Company Information:

Company Name: Fullerton Engineering/Tower & T-Mobile as tenant
Address: 1400 Opus Place
City, State, Zip: Downers Grove, IL 60515.
Contact Person: Eileen Boland
Phone Number: 708-738-7118
Email Address: boland@insite-inc.com
Cell Number:
Project/Work Order Number:

Contractor Information:

Company Name: Another Level Tower Servies Inc (Tower installer)
Address: 1312 W. Tower Rd
City, State, Zip: Kankakee IL, 60901
Contact Person: 815-278-2024
Phone Number: (815) 928-8092
Email Address: jared.m@anotherleveltsi.com
Cell Number:

PROJECT LOCATION: 339 W. 57th St, Hinsdale

Description of work covered under this permit: Relocation of equipment due to Water Tank painting -
Proposed Temp tower. (Will file for separate permit for T-Mobile equipment, once contractor for antenna/related equipment assigned).
Total Cost of Construction:$140,000

Start Date: 3/15/23 **Completion Date:** 4/17/23

Site Plan/Details/Specifications (3 sets) included with application? ⦿ YES ○ NO
Currently registered as a Utility Contractor with the Village of Hinsdale? ⦿ YES ○ NO
Engineer Estimate of Cost included with application? ○ YES ⦿ NO

Type of Utility: ☐ ComEd ☐ Nicor ☐ Comcast ☐ Water ☐ Sewer
☑ Communications: ☐ Fiber Optic ☑ Wireless ☐ Other: Temp Tower

Applicant Information:

Print Name: Eileen Boland Phone Number: 708-738-7118
Company: Insite Inc. Email Address: boland@insite-inc.com
Signature: Eileen Boland Digitally signed by Eileen Boland Date: 2023.03.08 08:10:32 -06'00' Date: 3-8-2023

ALL CONSTRUCTION SHALL BE DONE IN ACCORDANCE WITH THE LATEST EDITION IN EFFECT ON THE DATE OF PERMIT APPLICATION OF THE FOLLOWING: STANDARD SPECIFICATIONS FOR ROAD AND BRIDGE CONSTRUCTION & SUPPLEMENTAL SPECIFICATIONS AND RECURRING SPECIAL PROVISIONS BY THE ILLINOIS DEPARTMENT OF TRANSPORTATION, ILLINOIS MANUAL ON UNIFORM TRAFFIC CONTROL DEVICES FOR STREETS AND HIGHWAYS, STANDARD SPECIFICATIONS FOR WATER AND SEWER MAIN CONSTRUCTION IN ILLINOIS, AND THE VILLAGE OF HINSDALE SUBDIVISION ORDINANCES (Ord. O2007-73, 11-6-2007) AND ENGINEERING STANDARDS.

Village Use Only

Permit Approved: [x] YES [ ] NO

Conditions for Approval/Reasons for Denial: TEMPORARY USE PERMIT ONLY. Equipment must be returned to exact location after project is completed. The installation of new or upgraded equipment to the water tower is prohibited. Full project schedule to be submitted prior to start. Contractor to coordinate operations with High School Dist 86 for bus schedules *. Coordination with other contractors will be required as other vender equipment is relocated. Restoration of all disturbed areas is required within 30 days of completion.

Approved By: A. Diaz Date: 03/10/23

* Jason Oskorep, Director of Operations Hinsdale Township High School District 86, 630-655-6105 office, 630-664-9734 cell.

FULLERTON
NETWORK INTEGRITY STARTS HERE

March 16, 2023

RE:	CH65464A
Project Type:	Temporary Monopole
Site Name:	Hinsdale Water Tank
Site Address:	339 W. 57th Street Hinsdale, IL 60521
Latitude/ Longitude:	N41.78613610, W87.93419160

To Whom It May Concern,

This letter summarizes our evaluation of the existing site soil conditions supporting the proposed temporary ballasted structure for the above referenced project.

Based on the review of provided Geotechnical Report # 222300 by G2 Consulting Group dated 10/27/2022, the existing site soil is adequate to support the proposed temporary ballasted structure provided that a proper ground preparation is done prior to the placement of temporary structure. The above-mentioned geotechnical report indicates presence at the site location of hard silty clay from finished grade to an approximate depth of 5 feet with a presumed allowable bearing pressure of 3000 psf. The soil boring referenced by the Geotechnical Report is located approximately 100 feet from the proposed temporary structure placement. It can be reasonably assumed that similar soil conditions are present at our proposed location.

At the start of construction, any existing topsoil and vegetation shall be removed from the limits of the proposed ballasted frame foundation. The exposed soils must be proof rolled with a 10-ton vibratory roller or loaded dump truck. Any unstable or unsuitable areas noted should be improved by compaction or removed and replaced with dense-graded granular engineered fill meeting the gradation specifications of IDOT CA6. Following completion of any required undercuts, a minimum of 12 inches of IDOT CA6 should be placed and compacted in an engineered manner within the limits of the proposed ballast frame foundation. The compacted aggregate base surface should be sloped to promote surface drainage and should extend above the surrounding grade to precent surface water ponding.

Upon completion of this subgrade preparation, it is our professional opinion that the site subgrade soils and dense graded engineered fill will provide the required minimum bearing pressure to adequately support the proposed temporary ballasted structure.

Respectfully,

Abraham J. Rokach, S.E.

LICENSED STRUCTURAL ENGINEER
ABRAHAM J. ROKACH
081-004073
Ex. 11/30/2024
STATE OF ILLINOIS

CONSULTANT TEAM

PROJECT CONSULTANT:	TERRA CONSULTING GROUP, LTD. 600 BUSSE HIGHWAY PARK RIDGE, IL 60068 (847) 698-6400
STRUCTURAL: (TOWER ANALYSIS)	PROVIDED BY OTHERS
STRUCTURAL ANALYSIS DATE:	10/14/2022

2 THESE PLANS COMPLY WITH ALL VILLAGE ZONING DISTRICT REGULATIONS, STATE AND FEDERAL REGULATIONS, FEDERAL, STATE, AND LOCAL LAWS, VILLAGE BUILDING CODES, AND SAFETY STANDARDS.

VICINITY MAP

N.T.S.

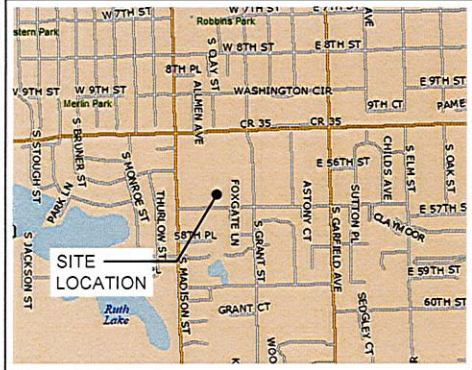

REGIONAL MAP

N.T.S.

PROJECT TYPE

PROPOSED AT&T ANTENNAS TO BE MOUNTED ON A TEMPORARY 130-0" DIRECT BURY MONOPOLE TOWER. T-MOBILE AND DUCOMM ANTENNAS TO BE MOUNTED ON A TEMPORARY 130' BALLAST TOWER WITH 25' X 25' BASE.

PROJECT INFORMATION

SITE COORDINATES:	LATITUDE: 41° 47' 10.09" N LONGITUDE: 87° 56' 03.09" W
ADDRESS:	339 WEST 57th STREET HINSDALE, IL 60521
JURISDICTION:	VILLAGE OF HINSDALE
OCCUPANCY:	UNINHABITED
CONSTRUCTION TYPE:	TEMP TOWERS
PROPERTY OWNER:	THE CITY OF HINSDALE 19 EAST CHICAGO AVE. HINSDALE, IL 60521
TOWER OWNER:	THE CITY OF HINSDALE
APPLICANT:	VERIZON WIRELESS 1515 WOODFIELD ROAD SCHAUMBURG, IL 60173
APPLICANT:	T-MOBILE 2001 BUTTERFIELD RD. 16TH FLOOR, SUITE 1600 DOWNERS GROVE, IL 60515
APPLICANT:	AT&T 2000 W AT&T DR. HOFFMAN ESTATES, IL 60192

verizon

1701 GOLF ROAD, TOWER 2, SUITE 400
ROLLING MEADOWS, ILLINOIS 60008
PHONE: (847) 619-5397 FAX: (847) 706-7415

T··Mobile·
stick together

2001 BUTTERFIELD RD.
16TH FLOOR, SUITE 1600
DOWNERS GROVE, IL 60515

at&t

2000 W. AT&T CENTER DR.
HOFFMAN ESTATES, IL 60192

OPERATES 24 HOURS A DAY 365 DAYS A YEAR
Call Before You Dig
JULIE ILLINOIS ONE CALL SYSTEM
CALL JULIE TOLL FREE 1(800) 892-0123 48 HOURS BEFORE YOU DIG

VZW SITE ID: 212521
TMO SITE ID: CH65464A
AT&T SITE ID: IL00750
SITE NAME: HINSDALE WT
339 W. 57th STREET
HINSDALE, IL 60521

LICENSED PROFESSIONAL ENGINEER JOHN ZIMMERMANN 062-047267 OF ILLINOIS
1/24/2023
Exp 11/30/2023

SHEET	DRAWING INDEX	REVISION
T-1	TITLE SHEET	1,2
LP	LOCATION PLAN	-
C-1	ENLARGED SITE PLAN	-
C-2	TEMPORARY FENCING AND COAX SUPPORT DETAILS	-
ANT-1	SITE ELEVATION	-
ANT-2	ANTENNA PLAN VIEWS	1,2
ANT-3	VZW ANTENNA INFORMATION	-
ANT-3A	TMO ANTENNA INFORMATION	1
ANT-3B	TMO ANTENNA INFORMATION	1
ANT-3C	TMO ANTENNA INFORMATION	1
ANT-3D	AT&T ANTENNA INFORMATION	-
ANT-3E	AT&T ANTENNA INFORMATION	-
ANT-3F	AT&T ANTENNA INFORMATION	-
E-1	VZW, TMO & AT&T ANTENNA GROUNDING PLANS	1,2
E-2	GROUNDING DETAILS	1,2
EX-1	PHOTO EXHIBIT	-

22" x 34" IS FULL SCALE | 11" x 17" IS HALF SCALE

ATTACHMENTS

verizon
at&t
T··Mobile·
stick together

TERRA CONSULTING GROUP, LTD.
600 BUSSE HIGHWAY
PARK RIDGE, IL 60068
PH: 847-698-6400
FAX: 847-698-6401

REVISIONS

NO.	DESCRIPTION	DATE	BY
-	ISSUED FOR REVIEW	12/06/22	T.S
1	REVISED T-MOBILE ANTENNA PLAN	01/05/23	T.S
2	ISSUED FOR FINAL	01/05/23	T.S

HINSDALE
WT

VZW #212521
TMO #CH65464A
AT&T #IL00750

339 W. 57TH STREET
HINSDALE, IL 60521

DRAWN BY	JJR
CHECKED BY	DS
DATE	12/06/22
PROJECT #	194-025

SHEET TITLE
TITLE SHEET

SHEET NUMBER
T-1

LEGEND

- POWER POLE
- TELEPHONE PEDESTAL
- MANHOLE
- WATER VALVE VAULT
- WATER SERVICE VALVE
- FIRE HYDRANT
- LIGHT POST
- PROPERTY LINE
- FENCE
- OVERHEAD POWER LINE — OHE
- UNDERGROUND TELCO — UGT
- UNDERGROUND POWER — UGE
- BURIED WATER LINE — W
- BURIED GAS LINE — G
- EDGE OF BUSH/TREES

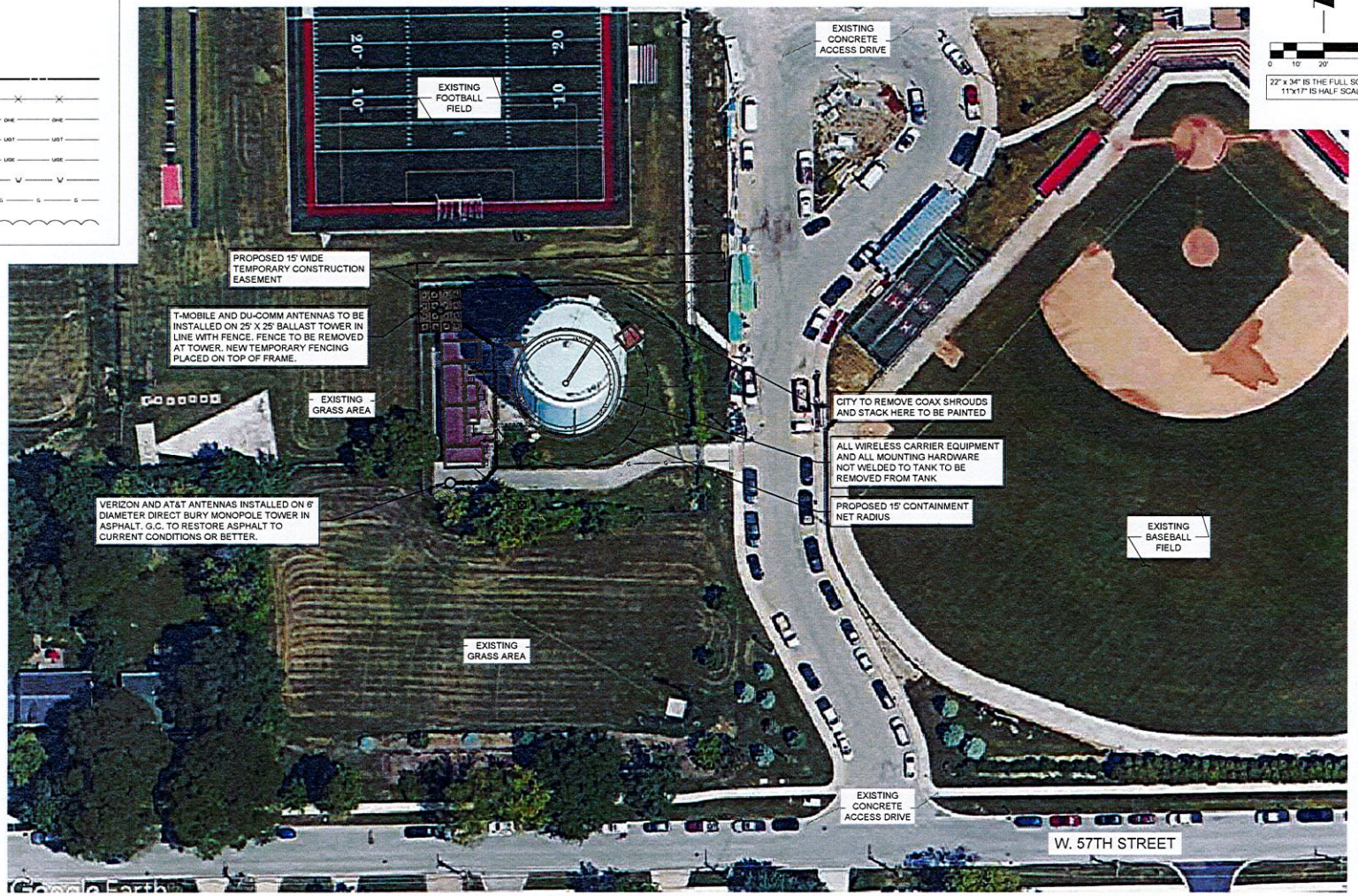

SCALE 1" = 20'

0 10' 20' 40'

22" x 34" IS THE FULL SCALE, 11"x17" IS HALF SCALE

OPERATES 24 HOURS A DAY 365 DAYS A YEAR

Call Before You Dig

JULIE ILLINOIS ONE CALL SYSTEM

CALL JULIE TOLL FREE 1(800) 892-0123 48 HOURS BEFORE YOU DIG

THIS SITE PLAN WAS CREATED OFF OF FIELD MEASUREMENTS BY THE DESIGNER, AS BOUNDARY SURVEY WAS NOT SUPPLIED FOR PURPOSES OF SITE LAYOUT.

1 LOCATION PLAN

verizon

at&t

T-Mobile stick together

TERRA CONSULTING GROUP, LTD.
600 BUSSE HIGHWAY
PARK RIDGE, IL 60068
PH: 847-698-6400
FAX: 847-698-6401

REVISIONS

NO.	DESCRIPTION	DATE	BY
-	ISSUED FOR REVIEW	12/06/22	T.S
1	REVISED T-MOBILE ANTENNA PLAN	01/10/23	T.S
2	ISSUED FOR FINAL	01/20/23	T.S

HINSDALE WT

VZW #212521
TMO #CH65464A
AT&T #IL00750

339 W. 57TH STREET
HINSDALE, IL 60521

DRAWN BY	JJR
CHECKED BY	DS
DATE	12/06/22
PROJECT #	194-025

SHEET TITLE
LOCATION PLAN

SHEET NUMBER
LP

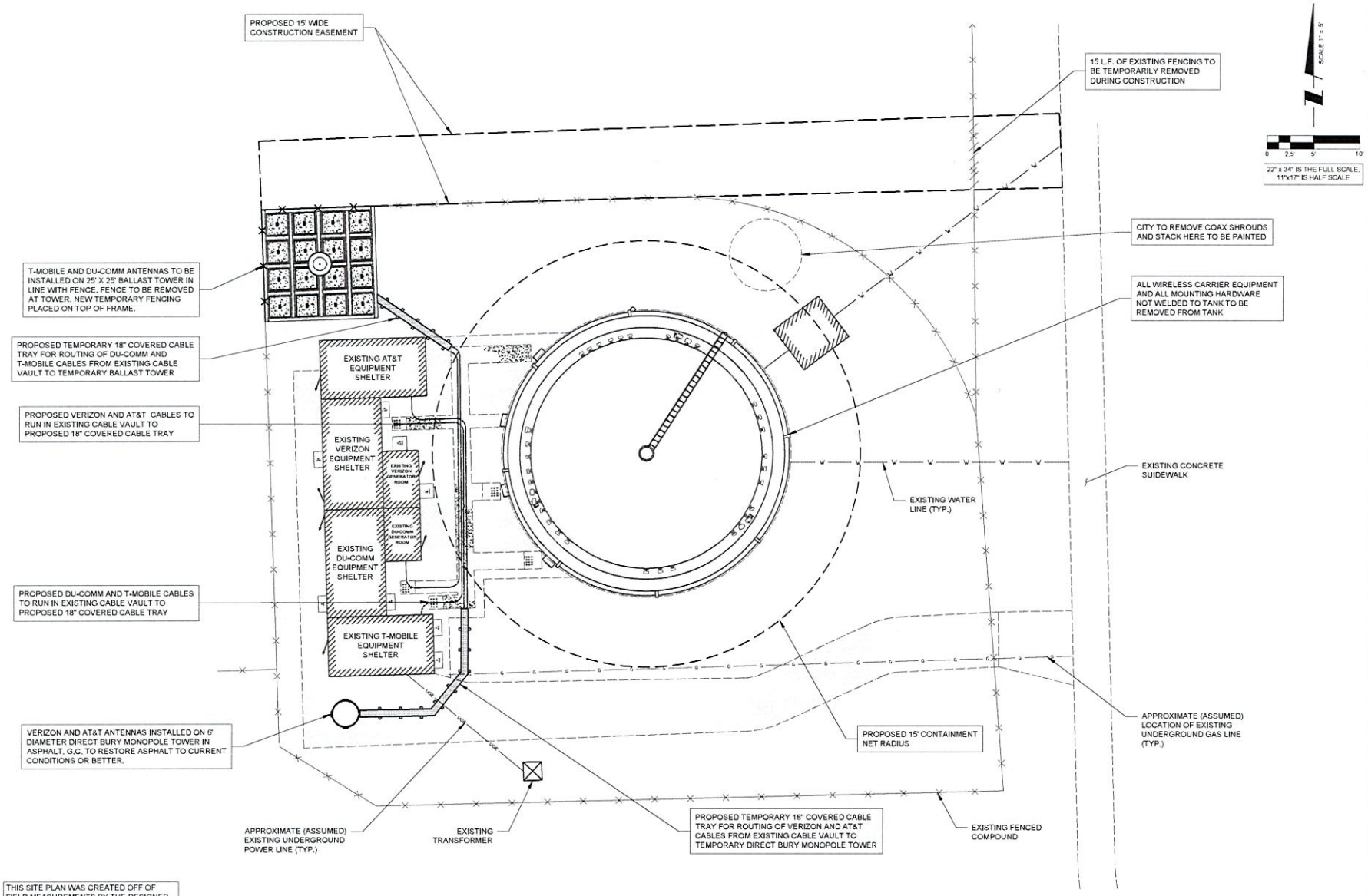

THIS SITE PLAN WAS CREATED OFF OF FIELD MEASUREMENTS BY THE DESIGNER, AS BOUNDARY SURVEY WAS NOT SUPPLIED FOR PURPOSES OF SITE LAYOUT.

verizon
at&t
T-Mobile
stick together

TERRA CONSULTING GROUP, LTD.
600 BUSSE HIGHWAY
PARK RIDGE, IL 60068
PH: 847-698-6400
FAX: 847-698-6401

REVISIONS

NO.	DESCRIPTION	DATE	BY
-	ISSUED FOR REVIEW	12/06/22	TJS
1	REVISED T-MOBILE ANTENNA PLAN	01/10/23	TJS
2	ISSUED FOR FINAL	01/20/23	TJS

HINSDALE WT

VZW #212521
TMO #CH65464A
AT&T #IL00750

339 W. 57TH STREET
HINSDALE, IL 60521

DRAWN BY	JJR
CHECKED BY	DS
DATE	12/06/22
PROJECT #	194-025

SHEET TITLE
ENLARGED SITE PLAN

SHEET NUMBER
C-1

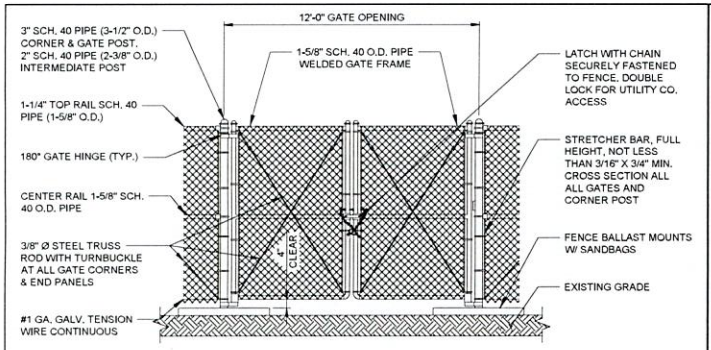

1 12'-0" DOUBLE SWING GATE
N.T.S.

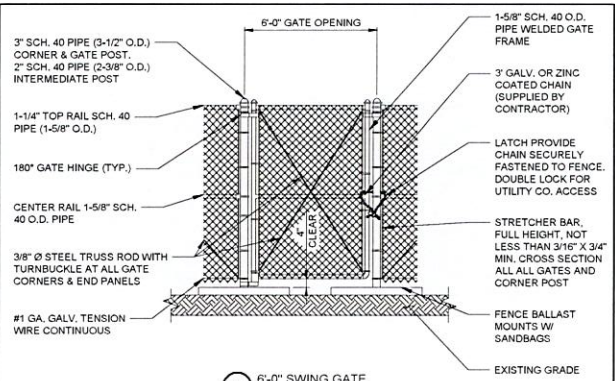

2 6'-0" SWING GATE
N.T.S.

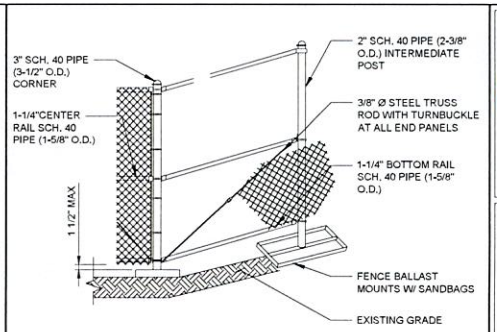

3 CORNER POST DETAIL
N.T.S.

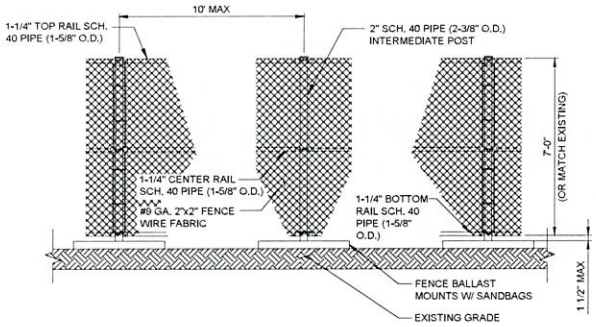

4 FENCE POST DETAILS
N.T.S.

NOTE:
GATE HINGE BOLTS SHALL HAVE THEIR THREADS PEENED OR WELDED TO PREVENT UNAUTHORIZED REMOVAL

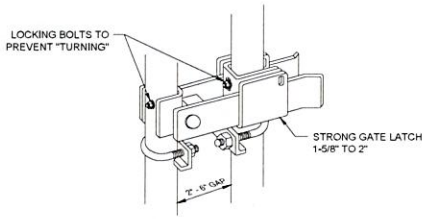

5 STRONG ARM GATE LATCH DETAIL
N.T.S.

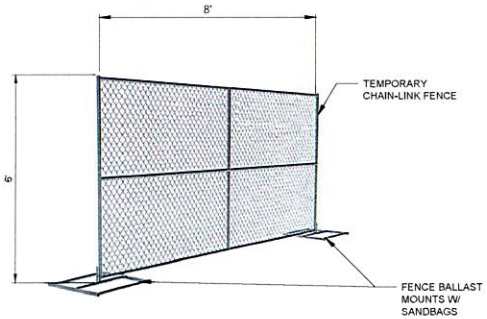

6 BALLAST FENCE MOUNTS
N.T.S.

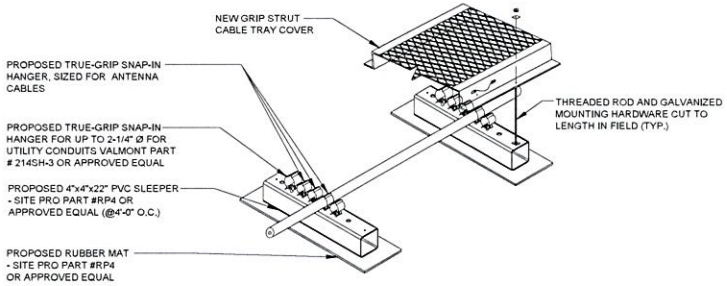

7 GROUND CONDUIT & CABLE SUPPORT
N.T.S.

verizon
at&t
T-Mobile
stick together

TERRA CONSULTING GROUP, LTD.
600 BUSSE HIGHWAY
PARK RIDGE, IL 60068
PH: 847-489-4400
FAX: 847-489-4401

REVISIONS

NO.	DESCRIPTION	DATE	BY
-	ISSUED FOR REVIEW	12/06/22	T.S
1	REVISED T-MOBILE ANTENNA PLAN	01/10/23	T.S
2	ISSUED FOR FINAL	01/10/23	T.S

HINSDALE
WT

VZW #212521
TMO #CH65464A
AT&T #IL00750

339 W. 57TH STREET
HINSDALE, IL 60521

DRAWN BY:	JJR
CHECKED BY:	DS
DATE:	12/06/22
PROJECT #	194-025

SHEET TITLE
TEMPORARY FENCING AND COAX SUPPORT DETAILS

SHEET NUMBER
C-2

NOTE:
THIS DRAWING IS FOR EXHIBIT AND LAYOUT PURPOSES ONLY.

REFER TO STRUCTURAL ANALYSES BY OTHERS.

FULL SCALE PRINT IS ON 22"x34" MEDIA
HALF SCALE PRINT IS ON 11"x17" MEDIA

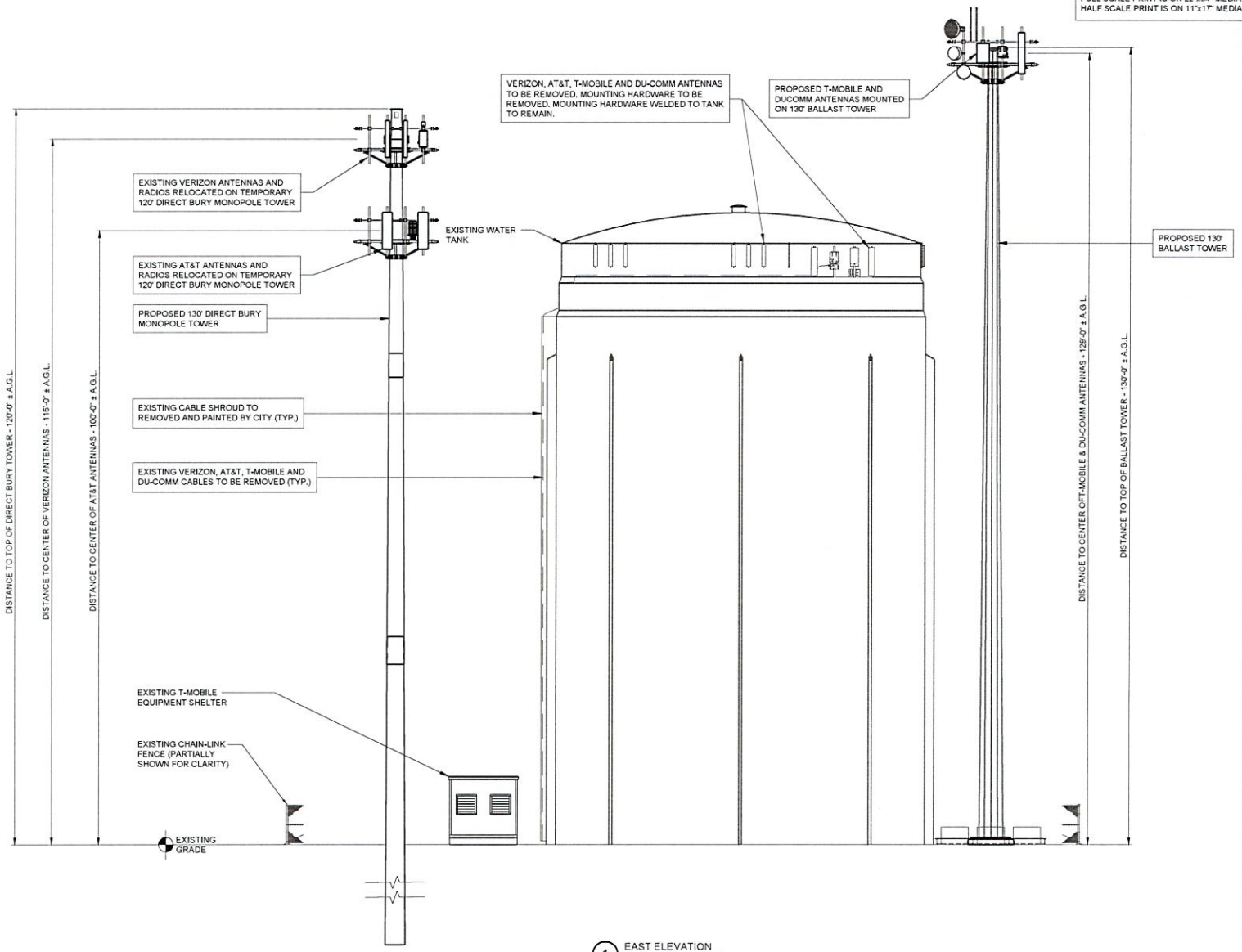

1 EAST ELEVATION
SCALE: 1/8" = 1'-0" ±

verizon
at&t
T-Mobile
stick together

TERRA CONSULTING GROUP, LTD.
600 BUSSE HIGHWAY
PARK RIDGE, IL 60068
PH: 847-698-6400
FAX: 847-698-6401

REVISIONS

NO.	DESCRIPTION	DATE	BY
-	ISSUED FOR REVIEW	12/06/22	T.S
1	REVISED T-MOBILE ANTENNA PLAN	01/15/23	T.S
2	ISSUED FOR FINAL	01/20/23	T.S

HINSDALE
WT

VZW #212521
TMO #CH65464A
AT&T #IL00750

339 W. 57TH STREET
HINSDALE, IL 60521

DRAWN BY	JJR
CHECKED BY	DS
DATE	12/06/22
PROJECT #	194-025

SHEET TITLE
SITE ELEVATION

SHEET NUMBER
ANT-1

NOTES:

1. THIS DRAWING IS FOR EXHIBIT AND LAYOUT PURPOSES ONLY.
2. NO ANTENNA OR LINE WORK TO BEGIN PRIOR TO CONFIRMATION OF ADEQUATE TOWER AND MOUNT CAPACITY.
3. G.C. TO VERIFY ANTENNA TECHNOLOGIES PRIOR TO REMOVAL OF ANY ANTENNAS.
4. REFER TO ANT-3 FOR DETAIL ON EXISTING & PROPOSED RF CONFIGURATION.

FINAL CONFIGURATION TO MATCH RFDS. REMOVE ALL EQUIPMENT NOT LISTED ON THE RFDS. REFER TO MOUNT ANALYSIS FOR ADDITIONAL REQUIREMENTS.

NOTE:
MOUNT SPECIFICATIONS BY OTHERS
TERRA CONSULTING GROUP WAS NOT CONTRACTED TO ANALYZE THE PROPOSED MOUNTS.

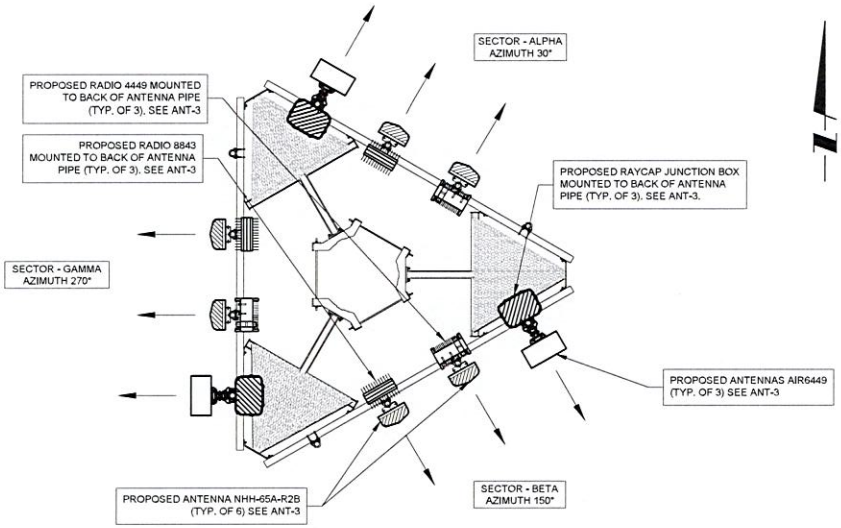

1 PROPOSED VZW ANTENNA LAYOUT
N.T.S.

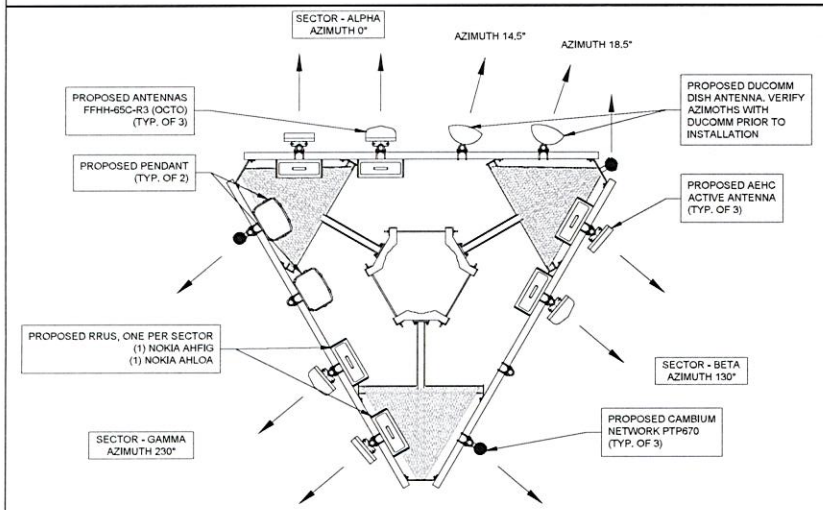

2 PROPOSED TMO & DUCOMM ANTENNA LAYOUT
N.T.S.

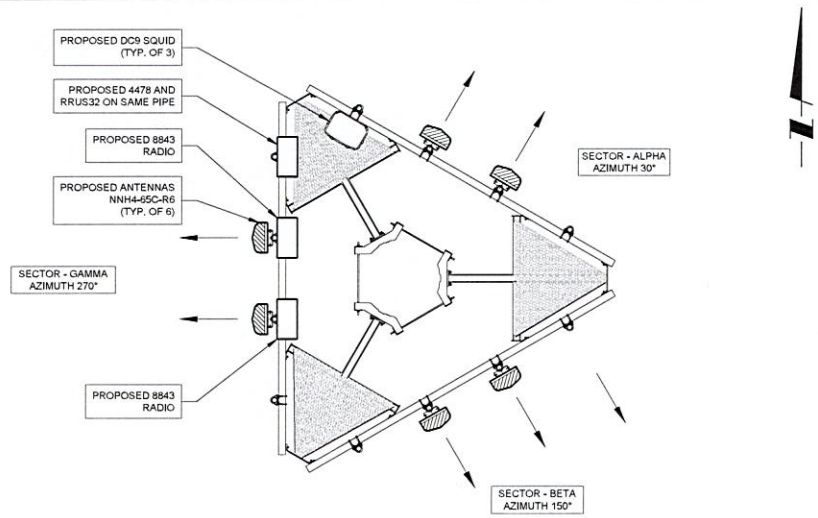

2 3 PROPOSED AT&T ANTENNA LAYOUT
N.T.S.

verizon
at&t
T-Mobile
stick together

TERRA CONSULTING GROUP, LTD.
600 BUSSE HIGHWAY
PARK RIDGE, IL 60068
PH: 847-698-6400
FAX: 847-698-6401

REVISIONS

NO.	DESCRIPTION	DATE	BY
-	ISSUED FOR REVIEW	12/06/22	T.S
1	REVISED T-MOBILE ANTENNA PLAN	01/10/23	T.S
2	ISSUED FOR FINAL	01/20/23	T.S

HINSDALE
WT

VZW #212521
TMO #CH65464A
AT&T #IL00750

339 W. 57TH STREET
HINSDALE, IL 60521

DRAWN BY	JJR
CHECKED BY	DS
DATE	12/06/22
PROJECT #	194-025

SHEET TITLE
ANTENNA PLAN VIEWS

SHEET NUMBER
ANT-2

verizon fuze | RFDS

WEST > Upper Midwest > Illinois/Wisconsin > Northern IL > Hinsdale_WT_TEMP

RF Submit by: Utz, Jeremy - jeremy.utz@verizonwireless.com - 9/21/2022, 10:30:31 AM

EE Submit by: Tutt, Bradley - bradley.tutt@verizonwireless.com - 9/23/2022, 5:43:54 AM

Project Details

FUZE Project ID:	16973417
Project Name:	Hinsdale_WT_TEMP
Project Alt Name:	Hinsdale_WT_TEMP - MKT 202 - MCR
Project Type:	Initial Build
Modification Type:	
Designed Sector Carrier 4G:	12
Designed Sector Carrier 5G:	3
Additional Sector Carrier 4G:	N/A
Additional Sector Carrier 5G:	N/A
FP Solution Type & Tech Type:	MCR:4G_700,4G_AWS,4G_PCS,5G_850,5G_L-Sub6
Carrier Aggregation:	false
MPT Id:	
eCIP-O:	false
Suffix:	

Location Information

Site ID:	617342699
E-NodeB ID:	202111,2029048,2027111
PSLC:	212521
Switch Name:	Hickory Hills
Tower Owner:	
Tower Type:	Monopole
Site Type:	MACRO
Site Sub Type:	TRADITIONAL
Street Address:	339 W 57th Street
City:	Hinsdale
State:	IL
Zip Code:	60521
County:	DuPage
Latitude:	41.786006 / 41° 47' 9.6216" N
Longitude:	-87.934419 / 87° 56' 3.9084" W

RFDS Project Scope:

1 RFDS TITLE SHEET
N.T.S.

Antenna Summary

Added

700	850	1900	AWS	L-Sub6	Make	Model	Centerline	Tip Height	Azimuth	RET	4xRx	Inst. Type	Quantity	Item ID
LTE	5G	LTE	LTE		COMMSCOPE	NHH-65A-R2B	115	117.3	30(0001) 30(01) 150(0002) 150(02) 270(0003) 270(03)	false	false	PHYSICAL	6	NHH-65A-R2B
				5G	Ericsson	AIR6449	115	116.3	30(0001) 150(0002) 270(0003)	false	false	PHYSICAL	3	

Removed

700	850	1900	AWS	L-Sub6	Make	Model	Centerline	Tip Height	Azimuth	RET	4xRx	Inst. Type	Quantity	Item ID

No data available.

Retained

700	850	1900	AWS	L-Sub6	Make	Model	Centerline	Tip Height	Azimuth	RET	4xRx	Inst. Type	Quantity	Item ID

No data available.

Added: 9 | Removed: 0 | Retained: 0

2 ANTENNA SUMMARY
N.T.S.

Equipment Summary

Added

Equipment Type	Location	700	850	1900	AWS	L-Sub6	Make	Model	Cable Length	Cable Size	Install Type	Quantity	Item ID
Hybrid Cable	Tower						Commscope	HFT1206-24SV2-xxxG			PHYSICAL	3	
OVP Box	Tower						Commscope	RC3DC-3315-PF-48			PHYSICAL	3	
RRU	Tower	LTE	5G				Ericsson	4449			PHYSICAL	3	KRC161749/1
RRU	Tower			LTE	LTE		Ericsson	8843			PHYSICAL	3	KRC161707/2
RRU	Tower					5G	Ericsson	AIR6449			PHYSICAL	3	

Removed

Equipment Type	Location	700	850	1900	AWS	L-Sub6	Make	Model	Cable Length	Cable Size	Install Type	Quantity	Item ID

No data available.

Retained

Equipment Type	Location	700	850	1900	AWS	L-Sub6	Make	Model	Cable Length	Cable Size	Install Type	Quantity	Item ID

No data available.

3 EQUIPMENT SUMMARY
N.T.S.

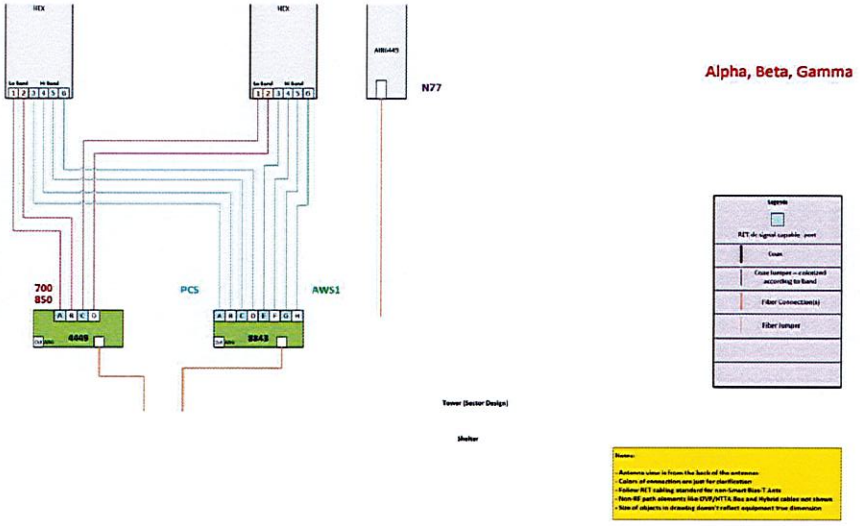

4 CABLE DIAGRAM
N.T.S.

verizon
at&t
T-Mobile
stick together

TERRA CONSULTING GROUP, LTD.
600 BUSSE HIGHWAY
PARK RIDGE, IL 60068
PH: 847-698-6400
FAX: 847-698-6401

REVISIONS

NO	DESCRIPTION	DATE	BY
-	ISSUED FOR REVIEW	12/06/22	TJS
1	REVISED T-MOBILE ANTENNA PLAN	01/10/23	TJS
2	ISSUED FOR FINAL	01/20/23	TJS

HINSDALE
WT

VZW #212521
TMO #CH65464A
AT&T #IL00750

339 W. 57TH STREET
HINSDALE, IL 60521

DRAWN BY	JJR
CHECKED BY	DS
DATE	12/06/22
PROJECT #	194-025

SHEET TITLE
VZW ANTENNA INFORMATION

SHEET NUMBER
ANT-3

56790EZ_SR_4sec.jpg

Configuration 56790EZ_SR_4Sec

* For 5G and LTE Airscale BB dimensioning refer to Fiber Port matrices.

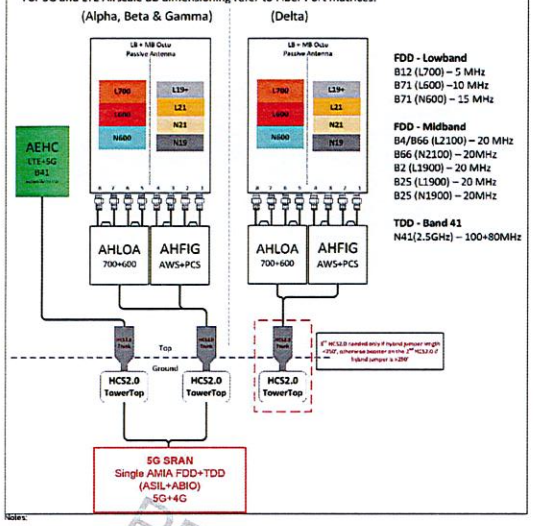

FDD - Lowband
B12 (L700) – 5 MHz
B71 (L600) –10 MHz
B71 (N600) – 15 MHz

FDD - Midband
B4/B66 (L2100) – 20 MHz
B66 (N2100) – 20MHz
B2 (L1900) – 20 MHz
B25 (L1900) – 20 MHz
B25 (N1900) – 20MHz

TDD - Band 41
N41(2.5GHz) – 100+80MHz

Notes:

Configuration 56790EZ_SR_T

* For 5G and LTE Airscale BB dimensioning refer to Fiber Port matrices.

(Alpha, Beta & Gamma)

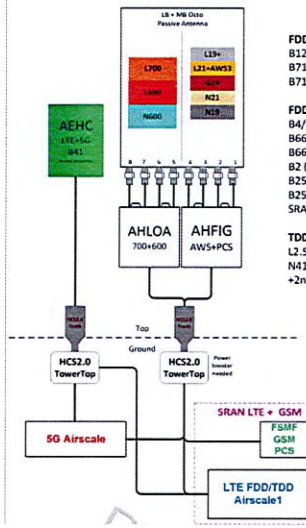

FDD - Lowband
B12 (L700) – 5 MHz
B71 (L600) –10 MHz
B71 (N600) – 15 MHz

FDD - Midband
B4/B66 (L2100) – 20 MHz
B66 (N2100) – 20MHz
B66 (AWS3) – 5MHz
B2 (L1900) – 20 MHz
B25 (L1900) – 20 MHz
B25 (N1900) – 20MHz
SRAN – GSM PCS

TDD - Band 41
L2.5(2.5GHz)– 60 MHz
N41(2.5GHz) – 100MHz
+2nd carrier (<=80MHz)

Existing RAN Equipment

Template: 56790EZ_SR_4Sec

Enclosure	1	2	3	4	5
Enclosure Type	Tower Top Mount (RAN4)	H-Frame Mount (RAN4)	Ceramic 600A Site Support Cabinet	Ancillary Equipment (Nokia)	Genesis Battery Cabinet for 600A SSC
Radio	AHFIG (x 4) L2100 L1900 N1900 (EPC/NANO/DARK) N2100 AHLOA (x 4) N600 L600 L700				
Baseband		FSMF L18UT (SEC/OMNI/SS/NNEC) N18UT	ASIA L2100 C700 L700 N700 N2100 ASIB N2500 ASIL N700		
Hybrid Cable System				250' HCS 2.0 Trunk - 12MAWG 24 SM FIBER PR NSN High Cap HCS 200ft (x 4) NSN High Cap HCS 75ft (x 4)	
Baseband Submodule			ASIA (x 3) L700 L700 ASIB N700 N700 ABIC (x 3) L2500 ASIL N1900 N1900 (DARK) ASIL (x 3) N600 N1900 N1900 (DARK) ABIO N2500 FBBC L18UT (SEC/OMNI/SS/DARK) N18UT		
Baseband Subrack			AMIA (x 3)		
Power subsystem			Breakers "Select size" Rectifier Shelf "Select size"		Batteries "Select size"
Transport System			CSR 10Ge V1 (Gen1)		
Junction Box					
RAN Scope of Work:					

12/22/2022: updated rad ctr from 99' to 129' per Rob S.
09/11/2022: reduced to 3 sector design for temporary deployment due to Hinsdale Watertank Rehabilitation Project

verizon
at&t
T-Mobile
stick together

TERRA
TERRA CONSULTING GROUP, LTD
600 BUSSE HIGHWAY
PARK RIDGE, IL 60068
PH: 847-698-6400
FAX: 847-698-6401

REVISIONS

NO.	DESCRIPTION	DATE	BY
-	ISSUED FOR REVIEW	12/06/22	TJS
1	REVISED T-MOBILE ANTENNA PLAN	01/10/23	TJS
2	ISSUED FOR FINAL	01/20/23	TJS

HINSDALE
WT

VZW #212521
TMO #CH65464A
AT&T #IL00750

339 W. 57TH STREET
HINSDALE, IL 60521

DRAWN BY	JJR
CHECKED BY	DS
DATE	12/06/22
PROJECT #	194-025

SHEET TITLE
TMO ANTENNA INFORMATION

SHEET NUMBER
ANT-3A

Sector 1 (Existing) view from front (Note: the images show view from behind)

Coverage Type	A - Outdoor Macro				
Antenna	1				2
Antenna Model	Commscope - FFHH-65C-R3 (Octo)				AEHC (Active Antenna - Massive MIMO)
Azimuth	0				0
M. Tilt	0				0
Height (ft)	99				99
Ports	P1	P2	P3	P4	P5
Active Tech	L700 L600 N600	L700 L600 N600	N1900 G1900 L1900 L2100	L2100 L1900 G1900 N1900	L2500 N2500
Dark Tech			N2100	N2100	
Restricted Tech					
Decomm. Tech			U1900	U1900	
E. Tilt					
Cables					
TMAs					
Diplexer / Combiners					
Radio					
Sector Equipment					

Unconnected Equipment:

Scope of Work:

Sector 1 (Proposed) view from front (Note: the images show view from behind)

Coverage Type	A - Outdoor Macro				
Antenna	1				2
Antenna Model	Commscope - FFHH-65C-R3 (Octo)				AEHC (Active Antenna - Massive MIMO)
Azimuth	0				0
M. Tilt	0				0
Height (ft)	129				129
Ports	P1	P2	P3	P4	P5
Active Tech	L700 L600 N600	L700 L600 N600	N1900 G1900 L1900 L2100	L2100 L1900 G1900 N1900	L2500 N2500
Dark Tech			N2100 U1900	U1900 N2100	
Restricted Tech					
Decomm. Tech					
E. Tilt					
Cables					
TMAs					
Diplexer / Combiners					
Radio					
Sector Equipment					

Unconnected Equipment:

Scope of Work:

Sector 2 (Existing) view from front (Note: the images show view from behind)

Coverage Type	A - Outdoor Macro				
Antenna	1				2
Antenna Model	Commscope - FFHH-65C-R3 (Octo)				AEHC (Active Antenna - Massive MIMO)
Azimuth	90				90
M. Tilt	0				0
Height (ft)	99				99
Ports	P1	P2	P3	P4	P5
Active Tech	L700 L600 N600	L700 L600 N600	L2100 L1900 G1900 N1900	L2100 L1900 G1900 N1900	L2500 N2500
Dark Tech			N2100	N2100	
Restricted Tech					
Decomm. Tech			U1900	U1900	
E. Tilt					
Cables					
TMAs					
Diplexer / Combiners					
Radio					
Sector Equipment					

Unconnected Equipment:

Scope of Work:

Sector 2 (Proposed) view from front (Note: the images show view from behind)

Coverage Type	A - Outdoor Macro				
Antenna	1				2
Antenna Model	Commscope - FFHH-65C-R3 (Octo)				AEHC (Active Antenna - Massive MIMO)
Azimuth	130				130
M. Tilt	0				0
Height (ft)	129				129
Ports	P1	P2	P3	P4	P5
Active Tech	L700 L600 N600	L700 L600 N600	L2100 L1900 G1900 N1900	L2100 L1900 G1900 N1900	L2500 N2500
Dark Tech			U1900 N2100	U1900 N2100	
Restricted Tech					
Decomm. Tech					
E. Tilt					
Cables					
TMAs					
Diplexer / Combiners					
Radio					
Sector Equipment					

Unconnected Equipment:

Scope of Work:

verizon
at&t
T-Mobile
stick together

TERRA CONSULTING GROUP, LTD.
600 BUSSE HIGHWAY
PARK RIDGE, IL 60068
PH: 847-488-8400
FAX: 847-488-8401

REVISIONS

NO.	DESCRIPTION	DATE	BY
-	ISSUED FOR REVIEW	12/06/22	T.S
1	REVISED T-MOBILE ANTENNA PLAN	01/10/23	T.S
2	ISSUED FOR FINAL	01/20/23	T.S

HINSDALE
WT

VZW #212521
TMO #CH65464A
AT&T #IL00750

339 W. 57TH STREET
HINSDALE, IL 60521

DRAWN BY	JJR
CHECKED BY	DS
DATE	12/06/22
PROJECT #	194-025

SHEET TITLE
TMO ANTENNA INFORMATION

SHEET NUMBER
ANT-3B

Sector 3 (Existing) view from front (Note: the images show view from behind)					
Coverage Type	A - Outdoor Macro				
Antenna	1				2
Antenna Model	Commscope - FFHH-65C-R3 (Octo)				AEHC (Active Antenna - Massive MIMO)
Azimuth	180				180
M. Tilt	0				0
Height (ft)	99				99
Ports	P1	P2	P3	P4	P5
Active Tech	L700 L600 N600	L700 L600 N600	L2100 L1900 G1900 N1900	L2100 L1900 G1900 N1900	L2500 N2500
Dark Tech			N2100	N2100	
Restricted Tech					
Decomm. Tech			U1900	U1900	
E. Tilt					
Cables					
TMAs					
Diplexer / Combiners					
Radio					
Sector Equipment					

Unconnected Equipment:

Scope of Work:

Sector 3 (Proposed) view from front (Note: the images show view from behind)					
Coverage Type	A - Outdoor Macro				
Antenna	1				2
Antenna Model	Commscope - FFHH-65C-R3 (Octo)				AEHC (Active Antenna - Massive MIMO)
Azimuth	230				230
M. Tilt	0				0
Height (ft)	129				129
Ports	P1	P2	P3	P4	P5
Active Tech	L700 L600 N600	L700 L600 N600	L2100 L1900 G1900 N1900	L2100 L1900 G1900 N1900	L2500 N2500
Dark Tech			U1900 N2100	U1900 N2100	
Restricted Tech					
Decomm. Tech					
E. Tilt					
Cables					
TMAs					
Diplexer / Combiners					
Radio					
Sector Equipment					

Unconnected Equipment:

Scope of Work:

Sector 4 (Existing) view from front (Note: the images show view from behind)				
Coverage Type	A - Outdoor Macro			
Antenna	1			
Antenna Model	Commscope - FFHH-65C-R3 (Octo)			
Azimuth	270			
M. Tilt				
Height (ft)	99			
Ports	P1	P2	P3	P4
Active Tech	L700 L600 N600	L700 L600 N600	L2100 L1900 G1900 N1900	L2100 L1900 G1900 N1900
Dark Tech			N2100	N2100
Restricted Tech				
Decomm. Tech			U1900	U1900
E. Tilt				
Cables				
TMAs				
Diplexer / Combiners				
Radio				
Sector Equipment				

Unconnected Equipment:

Scope of Work:

verizon
at&t
T-Mobile
stick together

TERRA CONSULTING GROUP, LTD.
600 BUSSE HIGHWAY
PARK RIDGE, IL 60068
PH: 847-698-6400
FAX: 847-698-6401

REVISIONS

NO	DESCRIPTION	DATE	BY
-	ISSUED FOR REVIEW	12/06/22	T.S
1	REVISED T-MOBILE ANTENNA PLAN	01/11/23	T.S
2	ISSUED FOR FINAL	01/20/23	T.S

HINSDALE
WT

VZW #212521
TMO #CH65464A
AT&T #IL00750

339 W. 57TH STREET
HINSDALE, IL 60521

DRAWN BY	JJR
CHECKED BY	DS
DATE	12/06/22
PROJECT #	194-025

SHEET TITLE
TMO ANTENNA INFORMATION

SHEET NUMBER
ANT-3C

Section 1.1 - REDS GENERAL INFORMATION

Section 2 - LOCATION INFORMATION

Section 16A - PLANNED/PROPOSED TOWER CONFIGURATION - SECTION A (FOR OWNS)

Section 16B - PLANNED/PROPOSED TOWER CONFIGURATION - SECTION B

Section 16C - PLANNED/PROPOSED TOWER CONFIGURATION - SECTION C

verizon

at&t

T··Mobile·
stick together

TERRA CONSULTING GROUP, LTD.
600 BUSSE HIGHWAY
PARK RIDGE, IL 60068
PH: 847-698-6400
FAX: 847-698-6401

REVISIONS

NO.	DESCRIPTION	DATE	BY
-	ISSUED FOR REVIEW	12/06/22	T.S
1	REVISED T-MOBILE ANTENNA PLAN	01/10/23	T.S
2	ISSUED FOR FINAL	01/05/23	T.S

HINSDALE
WT

VZW #212521
TMO #CH65464A
AT&T #IL00750

339 W. 57TH STREET
HINSDALE, IL 60521

DRAWN BY	JJR
CHECKED BY	DS
DATE	12/06/22
PROJECT #	194-025

SHEET TITLE
AT&T ANTENNA INFORMATION

SHEET NUMBER
ANT-3D

Section VA - FINAL TOWER CONFIGURATION - SECTOR A (ACTIVE)

| | | |

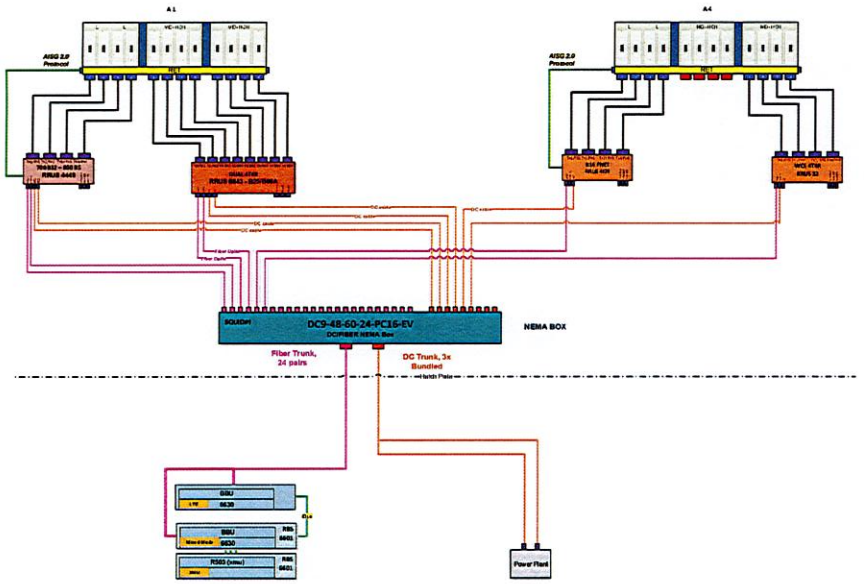

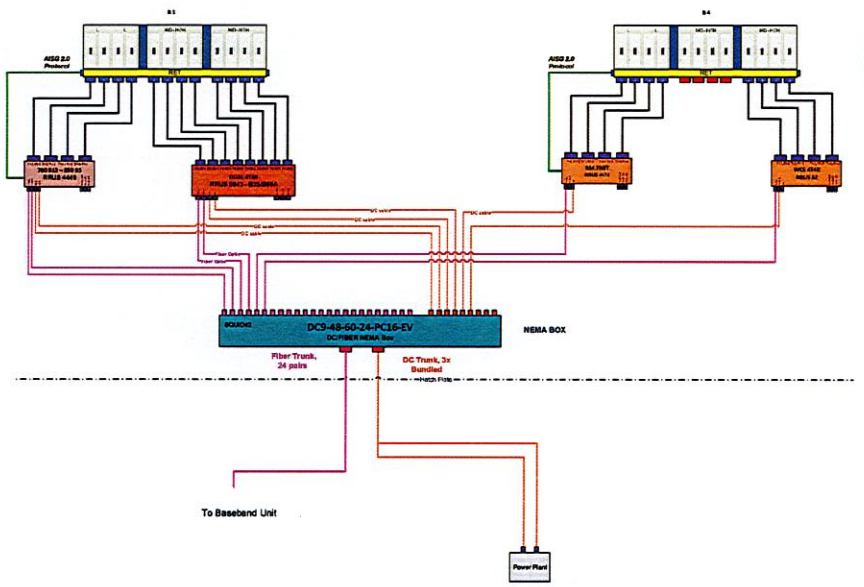

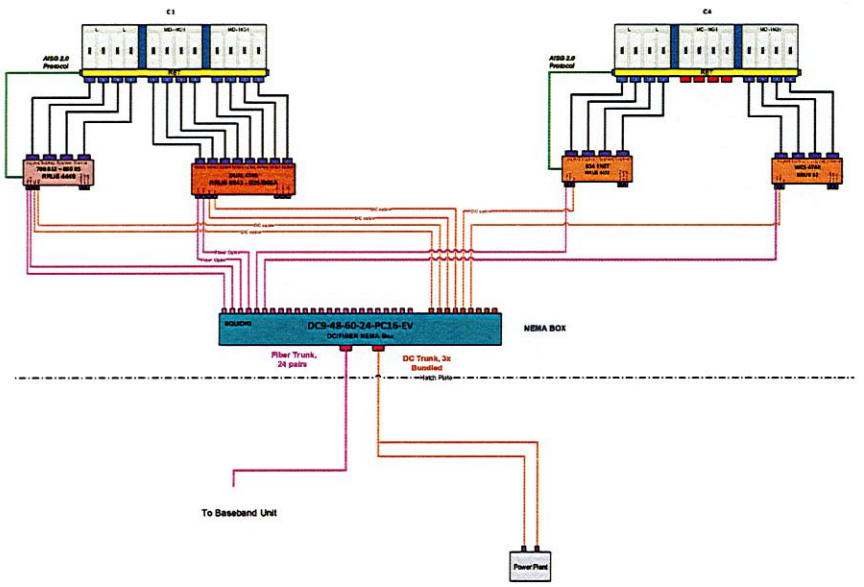

verizon
at&t
T-Mobile
stick together

TERRA CONSULTING GROUP, LTD.
600 BUSSE HIGHWAY
PARK RIDGE, IL 60068
PH: 847-488-8400
FAX: 847-488-8401

REVISIONS

NO	DESCRIPTION	DATE	BY
-	ISSUED FOR REVIEW	12/06/22	T.S
1	REVISED T-MOBILE ANTENNA PLAN	01/11/23	T.S
2	ISSUED FOR FINAL	01/20/23	T.S

HINSDALE
WT

VZW #212521
TMO #CH65464A
AT&T #IL00750

339 W. 57TH STREET
HINSDALE, IL 60521

DRAWN BY	JJR
CHECKED BY	DS
DATE	12/06/22
PROJECT #	194-025

SHEET TITLE
AT&T ANTENNA INFORMATION

SHEET NUMBER
ANT-3F

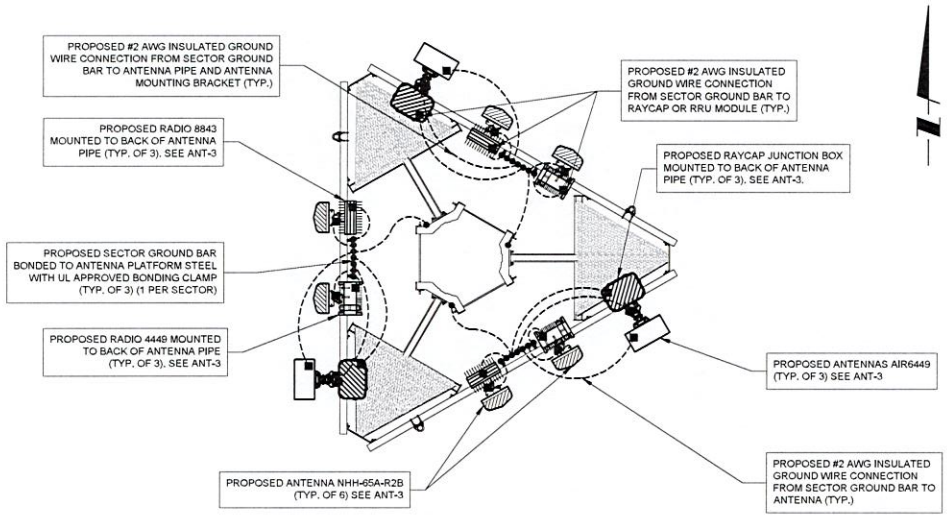

1 PROPOSED VZW ANTENNA GROUNDING PLAN
N.T.S.

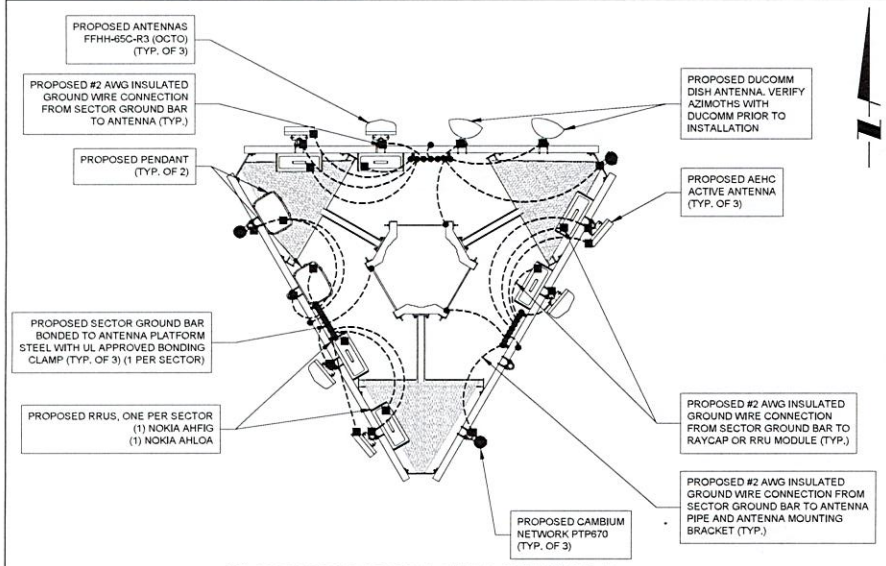

2 PROPOSED TMO & DUCOMM ANTENNA GROUNDING PLAN
N.T.S.

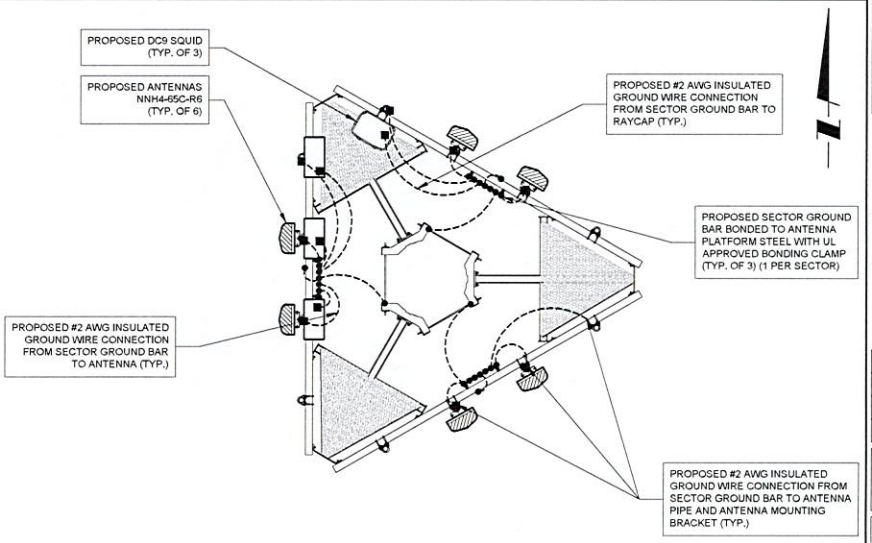

3 PROPOSED AT&T ANTENNA GROUNDING PLAN
N.T.S.

verizon
at&t
T-Mobile
stick together

TERRA CONSULTING GROUP, LTD.
600 BUSSE HIGHWAY
PARK RIDGE, IL 60068
PH: 847-698-6400
FAX: 847-698-6401

REVISIONS

NO.	DESCRIPTION	DATE	BY
-	ISSUED FOR REVIEW	12/06/22	TJS
1	REVISED T-MOBILE ANTENNA PLAN	01/11/23	TJS
2	ISSUED FOR FINAL	01/20/23	TJS

HINSDALE
WT

VZW #212521
TMO #CH65464A
AT&T #IL00750

339 W. 57TH STREET
HINSDALE, IL 60521

DRAWN BY	JJR
CHECKED BY	DS
DATE	12/06/22
PROJECT #	194-025

SHEET TITLE
VZW, TMO & AT&T ANTENNA GROUNDING PLANS

SHEET NUMBER
E-1

GROUNDING ELECTRODE SYSTEM NOTES:

1. ALL GROUNDING CONNECTIONS SHALL BE MADE BY THE EXOTHERMIC PROCESS CONNECTIONS SHALL INCLUDE ALL CABLE TO CABLE, SPLICES, ETC. ALL CABLE TO GROUND RODS, GROUND RODS SPLICES AND LIGHTNING PROTECTION SYSTEM AS INDICATED. GROUND FOUNDATION ONLY AS INDICATED BY PM. ALL MATERIALS USED (MOLDS, WELDING, METAL, TOOLS, ETC.) SHALL BE BY EXOTHERMIC PROCESS AND INSTALLED PER MANUFACTURERS RECOMMENDATIONS AND PROCEDURES. GROUND CONDUCTOR SHALL HAVE A MINIMUM 24" BENDING RADIUS.
2. ALL EXOTHERMIC CONNECTIONS ON GALVANIZED SURFACES SHALL BE CLEANED THOROUGHLY AND COLORED TO MATCH SURFACE WITH (2) TWO COATS OF SHERWIN-WILLIAMS GALVITE (WHITE) PAINT B50W3 (OR EQUAL) OR SHERWIN- WILLIAMS SILVERBRITE (ALUMINUM) B59S11 (OR EQUAL).
3. ALL ELECTRICAL & MECHANICAL GROUND CONNECTIONS SHALL HAVE ANTI-OXIDANT COMPOUND APPLIED TO CONNECTION.
4. FENCE/GATE: GROUND FENCE POSTS WITHIN 6 FEET OF ENCLOSURE AND 25 FEET OF TOWER AS INDICATED ON DRAWINGS. GROUND EACH GATE POST AND CORNER POST. GROUND CONNECTIONS TO FENCE POSTS SHALL BE MADE BY THE EXOTHERMIC PROCESS AND INSTALLED PER MANUFACTURER'S RECOMMENDATIONS AND PROCEDURES. ALL OTHER CONNECTIONS FOR THE GROUND GRID SYSTEM SHALL BE MADE BY THE EXOTHERMIC PROCESS, AND INSTALLED PER MANUFACTURER'S RECOMMENDATIONS AND PROCEDURES.
5. AFTER INSTALLATION OF THE CANOPY AT THE DOOR, GC/EC IS TO BOND THE CANOPY TO THE DOOR FRAME WITH A #2 CONDUCTOR. USE DOUBLE-LUG CONNECTION. PREP AND PAINT SURFACE TO MATCH AFTER INSTALLATION.
6. UTILITY COMPANY COORDINATION: ELECTRICAL CONTRACTOR SHALL CONFIRM THAT ALL WORK IS IN ACCORDANCE WITH THE RULES OF THE LOCAL UTILITY COMPANY BEFORE SUBMITTING THE BID. THE CONTRACTOR SHALL CHECK WITH THE UTILITY COMPANIES SUPPLYING SERVICE TO THIS PROJECT AND SHALL DETERMINE FROM THEM ALL EQUIPMENT AND CHARGES WHICH THEY WILL REQUIRE AND SHALL INCLUDE THE COST IN THE BID.
7. GROUND TEST: GROUND TESTS SHALL BE PERFORMED AS REQUIRED BY LESSEE STANDARD PROCEDURES. GROUND GRID RESISTANCE SHALL NOT EXCEED 5 OHMS.
8. CONTRACTOR SHALL SUBMIT THE GROUND RESISTANCE TEST REPORT AS FOLLOWS:
   1. ONE (1) COPY TO OWNER REPRESENTATIVE
   2. ONE (1) COPY TO ENGINEER
   3. ONE (1) COPY TO KEEP INSIDE EQUIPMENT ENCLOSURE

NOTE: EACH SECTOR BAR TO HAVE TO HAVE SEPARATE GROUND LEAD TO COLLAR MOUNT

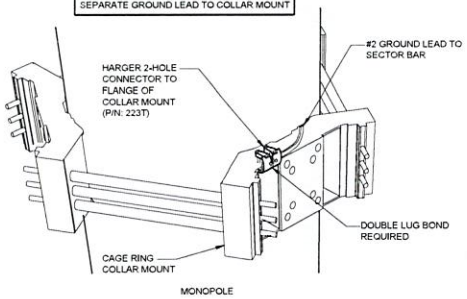

1 MONOPOLE GROUND AT ANTENNA LEVEL
SCALE: N.T.S.

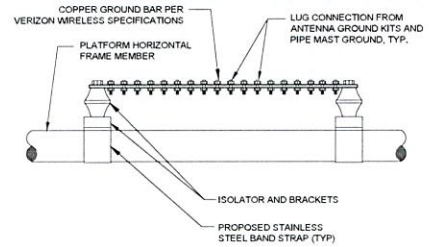

2 GROUND BAR AT SECTOR
N.T.S.

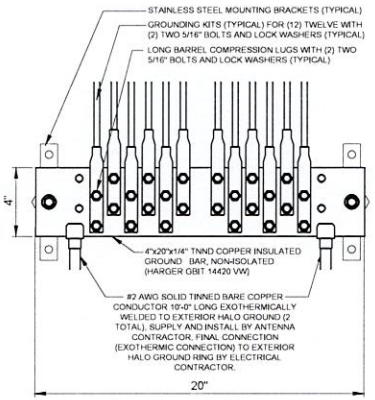

3 EXTERIOR GROUND BAR DETAIL
N.T.S.

NOTES:
1. ALL HARDWARE 18-8 STAINLESS STEEL INCLUDING BELLEVILLES. COAT ALL SURFACES WITH KOPR-SHIELD BEFORE MATING.
2. FOR GROUND BOND TO STEEL ONLY: INSERT A DRAGON TOOTH WASHER BETWEEN LUG AND STEEL, COAT ALL SURFACES WITH KOPR-SHIELD.
3. GROUND BARS, INSTALL BOLT HEAD TOWARD WALL
4. ENCLOSURES, INSTALL BOLT HEAD ON OUTSIDE OF ENCLOSURE

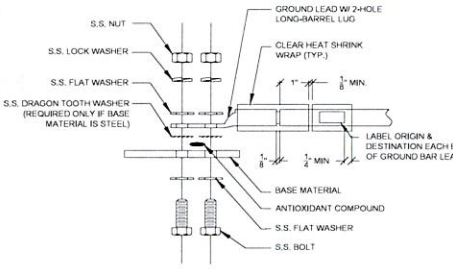

4 GROUND LUG INSTALLATION DETAIL
N.T.S.

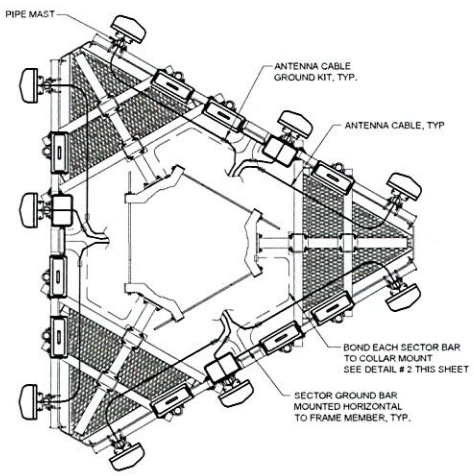

5 ANTENNA CABLE GROUNDING AT ANTENNA ELEVATION
N.T.S.

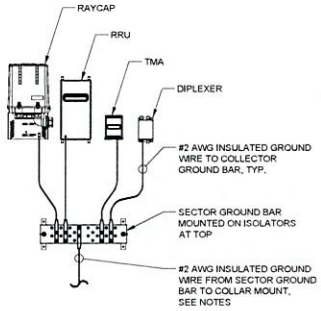

THIS DETAIL IS CONCEPTUAL TO DEMONSTRATE GROUNDING AT THE ANTENNA LEVEL.

6 TYPICAL APPURTENANCE GROUNDING AT ANTENNA LEVEL
N.T.S.

APPROVED UL LISTED GROUND CLAMPS	
APPLICATION	UL LISTED HARGER PART #
METAL FLANGE	213, 213T, 213TTP
PIPE MEMBER	CPC SERIES (SIZED TO FIT DIAMETER OF PIPE)
LARGER PIPE MEMBER	UPC SERIES (UNIVERSAL PIPE CLAMP) SIZED TO FIT DIAMETER OF PIPE
TO COLLAR MOUNT	233T

NOTES:
1. THE BOND BETWEEN THE SECTOR BAR AND THE TOWER IS TO BE MECHANICALLY BONDED TO COLLAR MOUNT. THE MECHANICAL BOND IS TO BE A UL APPROVED MECHANICAL CONNECTION CLAMP.
2. GROUND CONNECTIONS MUST BE DOUBLE HOLE CONNECTION. SPECIAL EXCEPTION ONLY TO EQUIPMENT THAT WILL NOT ALLOW FOR A DOUBLE HOLE CONNECTION.

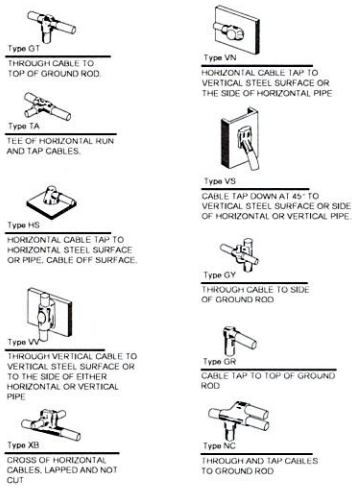

7 EXOTHERMIC WELD DETAILS
EXOTHERMIC AND HARGER ULTRAWELD OR APPROVED EQUAL

verizon
at&t
T-Mobile
stick together

TERRA CONSULTANTS, LTD
600 BUSSE HIGHWAY
PARK RIDGE, IL 60068
PH: 847-698-6400
FAX: 847-698-6401

REVISIONS

NO.	DESCRIPTION	DATE	BY
-	ISSUED FOR REVIEW	12/06/22	TJS
1	REVISED TMOBILE ANTENNA PLAN	01/10/23	TJS
2	ISSUED FOR FINAL	01/20/23	TJS

HINSDALE
WT

VZW #212521
TMO #CH65464A
AT&T #IL00750

339 W. 57TH STREET
HINSDALE, IL 60521

DRAWN BY	JJR
CHECKED BY	DS
DATE	12/06/22
PROJECT #	194-025

SHEET TITLE
GROUNDING DETAILS

SHEET NUMBER
E-2

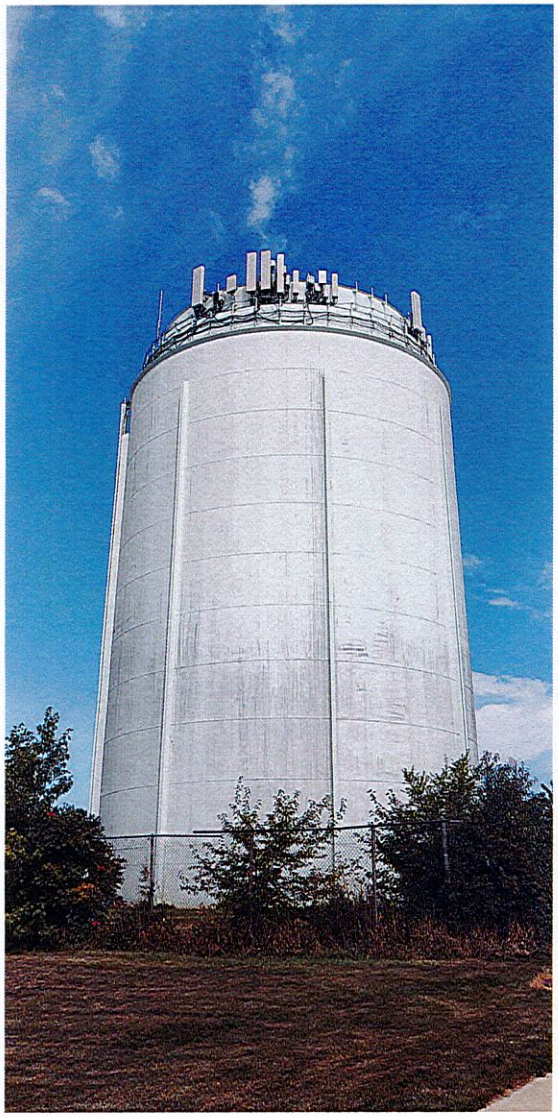

1 OVERALL TOWER PHOTO
SCALE: N.T.S.

2 PHOTO OF ANTENNA LEVEL
SCALE: N.T.S.

3 EXISTING RAYCAP JUNCTION BOX IN SHELTER
SCALE: N.T.S.

4 LESSEE ENTRY PANEL
SCALE: N.T.S.

5 LESSEE COAX ROUTE
SCALE: N.T.S.

verizon
at&t
T-Mobile
stick together

TERRA CONSULTING GROUP, LTD.
600 BUSSE HIGHWAY
PARK RIDGE, IL 60068
PH: 847-698-6400
FAX: 847-698-6401

REVISIONS

NO.	DESCRIPTION	DATE	BY
-	ISSUED FOR REVIEW	12/06/22	TJS
1	REVISED T-MOBILE ANTENNA PLAN	01/10/23	TJS
2	ISSUED FOR FINAL	01/20/23	TJS

HINSDALE
WT

VZW #212521
TMO #CH65464A
AT&T #IL00750

339 W. 57TH STREET
HINSDALE, IL 60521

DRAWN BY	JJR
CHECKED BY	DS
DATE	12/06/22
PROJECT #	194-025

SHEET TITLE
PHOTO EXHIBIT

SHEET NUMBER
EX-1