CITY OF ELKO

ARPA - ELKO MOUNTAIN BOOSTER PUMP & WATERLINE

PWP-EL-2024-190

FEBRUARY 2024

LOCATION MAP

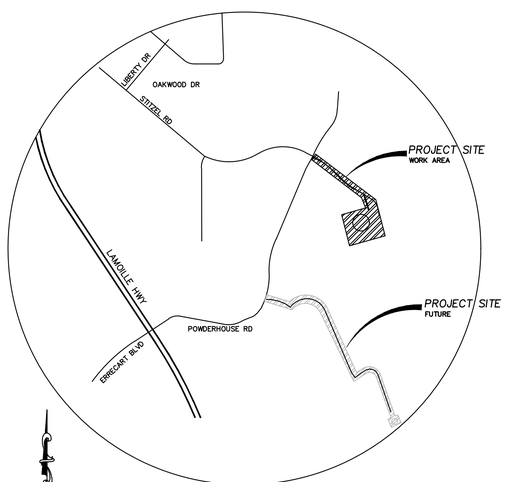

VICINITY MAP

OWNER:

CITY OF ELKO
ATTN: DALE JOHNSON
1751 COLLEGE AVE
ELKO, NV 89801
PH.: (775) 777-7100

ENGINEER

742 D STREET
ELKO, NEVADA 89801
PH.: (775) 738-3113
FAX: (775) 738-6199

SHEET INDEX:

TITLE SHEET	C1
NOTES & LEGENDS	C1.1
OVERALL SHEET LEGEND	C1.2
DEMO/GRADING PLANS	C2–C3
PLAN & PROFILE	D2.1–D3.1
DETAILS	D1–D1.3
PUMPHOUSE	D2–D7
ELECTRICAL	**E02 - E2.2**

ENGINEERING
742 D STREET
ELKO, NEVADA 89801
TEL: (775) 738 - 3113
FAX: (775) 738 - 6199
WWW.AMENGINEERING.PRO
• ENGINEERING DESIGN & ANALYSIS
• CONSTRUCTION MANAGEMENT
• QA / QC INSPECTIONS
• CONSTRUCTION SURVEYING
• MATERIALS TESTING

NEVADA PROFESSIONAL ENGINEER
AARON K. MARTINEZ
Exp. 12-31-25
CIVIL
No. 21636
2/7/2024

CITY OF ELKO

ARPA - ELKO MOUNTAIN BOOSTER PUMP & WATER LINE COVER SHEET

ELKO COUNTY NEVADA

REV	DATE	DESCRIPTION	BY
1	1/4/24	NDEP REVIEW (EL-0007277-23)D	RSR

C1

DATE:	FEBRUARY 2024
DRAWN BY:	RSR
DESIGNED BY:	AKM
CHECKED BY:	AKM
JOB NO.:	379.000

P:\379.000 - Elko Mountain Tank Site\Engineering\0-Civil 3D\DWG\379.000 Design-Moved.dwg,C1 OVERALL, 02/12/2024 07:37 am rosanna

GENERAL NOTES:

1. THE CONTRACTOR SHALL OBTAIN A PERMIT FOR PUBLIC WORKS CONSTRUCTION FROM **THE CITY OF ELKO** PUBLIC WORKS PRIOR TO THE START OF CONSTRUCTION.
2. THE CONTRACTOR SHALL CALL THE **CITY OF ELKO** ENGINEERING DEPARTMENT **(775-777-7210)** AND THE **CITY BUILDING** INSPECTOR AT **(775) 777-7220** AT LEAST FORTY-EIGHT (48) HOURS PRIOR TO THE START OF CONSTRUCTION.
3. ALL WORK SHALL CONFORM TO THE STANDARD SPECIFICATIONS AND DETAILS FOR PUBLIC WORKS CONSTRUCTION AND **THE CITY OF ELKO** STANDARDS. THE CONTRACTOR SHALL OBTAIN A PERMIT FOR PUBLIC WORKS CONSTRUCTION FROM **THE CITY OF ELKO** PUBLIC WORKS DEPARTMENT PRIOR TO THE START OF CONSTRUCTION.
4. DETAILS NOT SHOWN ON THESE DRAWINGS SHALL BE AS CONTAINED IN THE BOOK OF STANDARD DETAILS FOR PUBLIC WORKS CONSTRUCTION OR THE CURRENT EDITION OF STANDARD SPECIFICATIONS AND DETAILS FOR ROAD AND BRIDGE CONSTRUCTION AS PUBLISHED BY NDOT FOR WORK WITHIN THE NDOT RIGHT-OF-WAY.
5. THE LOCATION OF EXISTING UTILITIES SHOWN ON THESE DRAWINGS IS BASED ON THE BEST INFORMATION AVAILABLE TO THE ENGINEER. IT SHALL BE THE CONTRACTORS RESPONSIBILITY TO VERIFY THESE LOCATIONS AT THE PROPOSED POINTS OF CONNECTIONS AND IN AREAS OF POSSIBLE CONFLICT WITH NEW UTILITY INSTALLATION, PRIOR TO BEGINNING CONSTRUCTION. SHOULD THE CONTRACTOR FIND ANY DISCREPANCIES BETWEEN THE CONDITIONS EXISTING IN THE FIELD AND THE INFORMATION SHOWN ON THESE DRAWINGS, THEY SHALL NOTIFY THE ENGINEER BEFORE PROCEEDING WITH CONSTRUCTION.
6. IN ACCORDANCE WITH GENERALLY ACCEPTED CONSTRUCTION PRACTICES THE CONTRACTOR WILL BE SOLELY AND COMPLETELY RESPONSIBLE FOR THE CONDITIONS OF THE JOB SITE, INCLUDING SAFETY OF ALL PERSONS AND PROPERTY DURING PERFORMANCE OF THE WORK. THIS REQUIREMENT WILL APPLY CONTINUOUSLY AND NOT BE LIMITED TO NORMAL WORKING HOURS. THE CONTRACTOR SHALL BE RESPONSIBLE FOR THE DESIGN AND CONSTRUCTION OF PROPER SHORING OF TRENCHES IN ACCORDANCE WITH OCCUPATIONAL SAFETY LAWS.THE DUTIES OF THE PROJECT CIVIL ENGINEER DO NOT INCLUDE REVIEW OF THE ADEQUACY OF THE CONTRACTORS SAFETY IN, ON OR NEAR THE CONSTRUCTION SITE.
7. SHOULD IT APPEAR THAT THE WORK TO BE DONE, OR ANY MATTER RELATIVE THERETO, IS NOT SUFFICIENTLY DETAILED OR EXPLAINED ON THESE PLANS, THE CONTRACTOR SHALL CONTACT THE PROJECT ENGINEER FOR SUCH FURTHER EXPLANATIONS AS MAY BE NECESSARY.
8. THE CONTRACTOR SHALL CALL UNDERGROUND SERVICE ALERT "CALL BEFORE YOU DIG" (1-800-227-2600) FORTY-EIGHT (48) HOURS PRIOR TO THE START OF CONSTRUCTION.
9. PIPE SHALL BE LAID IN THE UPHILL DIRECTION, WITH BELL ENDS UPHILL.
10. PVC WATER PIPE INSTALLED AS A PART OF THE PROJECT SHALL BE OF THE DIAMETER SHOWN ON THE CONSTRUCTION PLANS. ALL WATER PIPE SHALL MEET THE MINIMUM REQUIREMENTS OF CURRENT STANDARDS ANSI/AWWA C900, DR 18 (235 psi), UNLESS OUTLINED BY MANUFACTURE RECOMMENDATIONS.
11. ALL COMPONENTS AND MATERIALS IN CONTACT WITH THE WATER SYSTEM SHALL BE ANSI/NSF 61 CERTIFIED
12. ALL FLANGE PIPE CONNECTIONS ARE EXPECTED TO BE MECHANICAL JOINT RESTRAINTS, REFERRED TO AS: "FLG x MJ ADAPTER". MORE SPECIFICALLY: "FLANGE BY MECHANICAL JOINT ADAPTERS". ALL PIPING INFRASTRUCTURE FOR THE PROJECT SHALL BE EQUIPPED WITH FLANGE MECHANICAL JOINT ADAPTERS THAT INCLUDE ALL NUTS, BOLTS, BACKUP RINGS FOR FLANGES, BACKUP RINGS FOR FLANGES SHALL BE TYPE 304 OR 316 STAINLESS STEEL, MEETING THE REQUIREMENTS OF ASTM A276 CONDITION. NUTS, BOLTS AND BACKUP RINGS SHALL BE OF THE SAME STEEL MATERIAL TYPE.
13. ALL MECHANICALLY RESTRAINED JUNCTIONS (TEE, ELBOW, ETC) SHALL BE PROVIDED AT SUBSEQUENT JOINTS WITH MECHANICAL RESTRAINTS FOR TWO (2) CONSECUTIVE JOINTS WITHIN THE PIPE RUN OR 51 FEET. SEE DETAIL 5/D1.
14. ALL THRUST BLOCKS ARE TO BE PLACED TO ENSURE NO BOLTING OR HEX NUT MECHANICAL RESTRAINT ASSEMBLY ARE ENCASED BY WITH CONCRETE OR SPLASHING. FOAM, PLASTIC TARPING, DUCT TAPE, AN OTHER OPERATIONS MAY BE NEEDED TO PROTECT INFRASTRUCTURE DURING & POST CONCRETE POUR.
15. ALL BOLTS AT THRUST BLOCKS AND VALVE SADDLES SHALL BE COVERED WITH VISQUEEN AND TAPED PRIOR TO CONCRETE PLACEMENT.
16. ALL WATER PIPE SHALL BE PRESSURE TESTED IN ACCORDANCE WITH AWWA C605. NAC 445A67145.7. WATERLINE TESTING SHALL BE 2-HOURS MINIMUM PER AWWA 605-21 FOR PVC PIPE AND AWWA 600-17 FOR DIP.
17. ALL PIPING SHALL BE INSTALLED PER AWWA C651-14. DISPOSAL OF CHLORINATED WATER SHALL BE COORDINATED WITH BUREAU OF WATER POLLUTION CONTROL. NAC 455A.67145.6.a. ALL WATERLINE AND RISERS SHALL BE DISINFECTED IN ACCORDANCE WITH NDEP BUREAU OF SAFE DRINKING WATER REQUIREMENTS AND AWWA C651 PRIOR TO ACCEPTANCE. THE CONTRACTOR SHALL BE RESPONSIBLE FOR COLLECTING ALL REQUIRED SAMPLES AND THE COST OF ANALYSIS AT A NEVADA-APPROVED LABORATORY.
18. OPENINGS IN UNFINISHED PIPING AND APPURTENANCES MUST BE SEALED AT THE END OF EACH WORKING DAY IN SUCH A MANNER AS TO PREVENT ENTRY OF BIRDS AND OTHER ANIMALS, DIRT, TRENCH WATER AND OTHER SOURCES OF POLLUTION OR CONTAMINATIONS. (NAC 445A.67145.8).
19. ALL TRAFFIC CONTROL AND BARRICADING WITHIN THE RIGHT-OF-WAY SHALL CONFORM TO SECTION 330 OF THE STANDARD SPECIFICATIONS, PART VI OF THE MANUAL ON UNIFORM TRAFFIC CONTROL DEVICES, LATEST EDITION AND THE NEVADA WORK ZONE TRAFFIC CONTROL HANDBOOK, 1986 EDITION. NO STREET CLOSURES WILL BE ALLOWED WITHOUT APPROVAL OF A TRAFFIC CONTROL PLAN BY **THE CITY OF ELKO** ENGINEER.
20. ALL ITEMS OF HISTORICAL SIGNIFICANCE FOUND MUST BE TURNED OVER TO THE CITY OF ELKO VIA THE PUBLIC WORKS DIRECTOR OR THE CITY ENGINEER.
21. ALL GRADING SHALL BE IN COMPLIANCE WITH THE PROJECTS GEOTECHNICAL REPORT.
22. ALL WORK SHALL BE DONE IN ACCORDANCE WITH THE INTERNATIONAL BUILDING CODE, OSHA REQUIREMENTS FOR EXCAVATION, AND SPECIAL REQUIREMENTS OF THE PERMIT. VIOLATIONS WILL RESULT IN THE STOPPAGE OF ALL WORK UNTIL THE VIOLATION IS CORRECTED.
23. PROTECTIVE MEASURES AND TEMPORARY DRAINAGE PROVISIONS SHALL BE USED TO PROTECT ADJOINING PROPERTIES DURING CONSTRUCTION OF IMPROVEMENTS.
24. DUST SHALL BE CONTROLLED BY THE CONTRACTOR TO THE SATISFACTION OF THE CITY, AND IN ACCORDANCE WITH THE AIR QUALITY PERMIT FROM THE NEVADA DIVISION OF ENVIRONMENTAL PROTECTION WHEN REQUIRED.
25. ALL TREE REMOVAL SHALL BE INCORPORATED WITHIN CLEAR & GRUB, DEMOLITION COMPONENT.
26. ALL STREETS SHALL BE MAINTAINED FREE OF DUST AND MUD CAUSED BY GRADING OPERATIONS. ALL OPERATIONS SHALL COMPLY WITH THE REQUIREMENTS OF THE STORM WATER DISCHARGE PERMIT FROM THE NEVADA DIVISION OF ENVIRONMENTAL PROTECTION.
27. THE DEVELOPER'S ENGINEER OR SURVEYOR SHALL SET GRADE STAKES FOR ALL DRAINAGE DEVICES AND THE CONTRACTOR SHALL OBTAIN INSPECTION BEFORE PLACING CONCRETE.
28. THE SOILS ENGINEER SHALL APPROVE ALL GRADING INCLUDING COMPACTION REQUIREMENTS AND THE STABILITY OF SLOPES CREATED, EXISTING TO REMAIN.
29. IN THE EVENT OF CHANGES ARISING DURING CONSTRUCTION, THE DEVELOPER SHALL BE RESPONSIBLE FOR DETERMINING AN ACCEPTABLE SOLUTION AND REVISING THE PLANS FOR REVIEW AND APPROVAL BY THE CITY. NO CHANGES IN THE DESIGN SHALL BE PERMITTED UNLESS WRITTEN APPROVAL IS GIVEN BY THE CITY.
30. EROSION CONTROL:
    - A. IN CASE OF EMERGENCY CALL 775-777-7100.
    - B. A STANDBY CREW FOR EMERGENCY WORK SHALL BE AVAILABLE AT ALL TIMES. NECESSARY MATERIALS SHALL BE AVAILABLE ON-SITE AND STOCKPILED AT APPROVED LOCATIONS TO FACILITATE RAPID CONSTRUCTION OF TEMPORARY DEVICES OR TO REPAIR DAMAGED EROSION CONTROL MEASURES.
    - C. AFTER A RAINSTORM, ALL SILT AND DEBRIS SHALL BE REMOVED FROM CHECK BERMS AND DESILTING FACILITIES. GRADED SLOPE SURFACE PROTECTION MEASURES DAMAGED DURING THE RAINSTORM SHALL ALSO BE REPAIRED.
    - D. FILL SLOPES AT THE PROJECT PERIMETER MUST DRAIN AWAY FROM THE TOP OF THE SLOPE AT THE CONCLUSION OF EACH WORKING DAY.
    - E. A SIX-FOOT HIGH PERIMETER FENCE OR A 24-HOUR GUARD SHALL BE POSTED ON THE SITE WHENEVER THE DEPTH OF WATER IN A FACILITY EXCEEDS 18".
24. AN AIR QUALITY PERMIT AND STORM WATER DISCHARGE PERMIT SHALL BE OBTAINED BY THE DEVELOPER OR OWNER IN ACCORDANCE WITH THE REQUIREMENTS OF THE NEVADA DIVISION OF ENVIRONMENTAL PROTECTION.
25. SANITARY SEWER SERVICE SHALL BE PROVIDED BY **ELKO SANITATION DISTRICT.**
26. ANY AND ALL ITEMS REQUIRING PURCHASING FOR THE USE IN THIS PROJECT MUST FIRST BE SUBMITTED TO THE ENGINEER WITH A PROPER MATERIAL SUBMITTAL SPECIFICATION SHEET. ANY AND ALL ITEMS MUST BE VERIFIED AND APPROVED BY THE ENGINEER, PRIOR TO PURCHASING. ITEMS PURCHASED WITHOUT SUCH APPROVAL MAY BE REJECTED FOR PROJECT USE.
27. PROJECT FALLS WITHIN ARPA GUIDELINES AS OUTLINED IN THE CONTRACT DOCUMENTS.
28. THESE PLANS AND SPECIFICATIONS WERE PREPARED FOR CONTINUITY AND IN COORDINATION WITH A CONNECTING CITY OF ELKO WATER TRANSMISSION MAINLINE PROJECT, "HOSPITAL 2nc SOURCE PROJECT." SEE PLANS BY FERRON KONAKIS, P.E.

ABBREVIATION

AC	ASPHALT CONCRETE	MUTCD	MANUAL FOR TRAFFIC CONTROL DEVICES
ACP	ASBESTOS CEMENT PIPE	N	NORTH
AGG	AGGREGATE	NAP	NOT A PART
BC	BEGIN CURVE (HORIZONTAL)	NIP	NOT IN PROJECT
BOW	BACK OF WALK	NTS	NOT TO SCALE
BF, BOF	BOTTOM OF FOOTING	OC	ON CENTER
BV	BUTTERFLY VALVE	OD	OUTSIDE DIAMETER
BVC	BEGIN VERTICAL CURVE	OH	OVERHEAD
BW	BOTH WAYS	(P)	PROPOSED
CB	CATCH BASIN	PCC	PORTLAND CEMENT CONCRETE
cfs	CUBIC FEET PER SECOND	PG	PAD GRADE
C&G	CURB AND GUTTER	PI	POINT OF INTERSECTION
℄	CENTER LINE	PIVC	POINT OF INTERSECTION VERTICAL CURVE
CL	CLASS	PL	PROPERTY LINE
CMP	CORRUGATED METAL PIPE	POCC	POINT OF COMPOUND CURVATURE
COMP	COMPACTION	POT	POINT OF TANGENCY
CONC	CONCRETE	PP	POWER POLE
CONTR/CTR	CONTRACTOR	PRC	POINT OF REVERSE CURVE
CP	CONCRETE PAD	PRVC	POINT OF REVERSE VERTICAL CURVE
CTV	CABLE TELEVISION	PVC	POLYVINYL CHLORIDE
DI	DROP INLET	PVMT	PAVEMENT
DIA	DIAMETER	Q_5	5 YEAR PEAK FLOW
DWY	DRIVEWAY	Q_{100}	100 YEAR PEAK FLOW
E	EAST	R	RADIUS
EA	EACH	RCP	REINFORCED CONCRETE PIPE
EC	END CURVE (HORIZONTAL)	REF	REFERENCE
ELL	ELBOW	RET	CURB RETURN
ELEC	ELECTRICAL	RP	RADIUS POINT
ELEV	ELEVATION	RT	RIGHT
EVC	END VERTICAL CURVE	R/W, ROW	RIGHT-OF-WAY
EX, EXIST, (E)	EXISTING	S=	SLOPE (FT./FT.)
EXT	EXTERIOR	S	SOUTH
FCA	FLANGE COUPLING ADAPTER	SD	STORM DRAIN
FE	FINISH ELEVATION	SDMH	STORM DRAIN MANHOLE
FES	FLARED END SECTION	SL	STREET LIGHT
FF	FINISH FLOOR	SS	SANITARY SEWER
FFC	FRONT FACE OF CURB	SSCO	SANITARY SEWER CLEAN OUT
FG	FINISH GRADE	SSMH	SANITARY SEWER MANHOLE
FH	FIRE HYDRANT	SSPWC	STANDARD SPEC. for PUBLIC WORKS CONST.
FL	FLOW LINE	STA	STATION
FLG	FLANGE	SW	SIDEWALK
fps	FEET PER SECOND	TELE	TELEPHONE
FTG	FOOTING	TBO	TEMPORARY BLOW OFF VALVE
G	GAS	TC	TOP OF CURB
GALV	GALVANIZED	TG	TO GRADE
GB	GRADE BREAK	TOB	TOP OF BERM
GDW	GRAVEL DRIVEWAY	TF, TOF	TOP OF FOOTING
GD	GROUND	TW, TOW	TOP OF WALL
GV	GATE VALVE	TS	TRAFFIC SIGNAL
H	HANDICAPPED	TSCB	TRAFFIC SIGNAL CONTROL BOX
HGL	HYDRAULIC GRADE LINE	TR	TOP OF RAIL
HORIZ	HORIZONTAL	TRANS	TRANSITION
HP	HIGH POINT	TYP	TYPICAL
ID	INSIDE DIAMETER	UG/P	UNDER GROUND POWER
IE	INVERT ELEVATION	UNO	UNLESS NOTED OTHERWISE
INT	INTERSECTION	V_5	VELOCITY AT 5 YEAR PEAK
IRR	IRRIGATION	VC	VERTICAL CURVE
LAT	LATERAL	VEL	VELOCITY
LF	LINEAR FEET	VERT	VERTICAL
LP	LOW POINT	VG	VALLEY GUTTER
LT	LEFT	W	WEST
MAX	MAXIMUM	W/G	WATER AND GAS
MDD	MAXIMUM DRY DENSITY	WL	WATER LINE
MH	MANHOLE	WM	WATER METER
MIN	MINIMUM	WS	WATER SURFACE
MJ	MECHANICAL JOINT	WV	WATER VALVE
MMD	MAXIMUM MARSHALL DENSITY	WWF	WELDED WIRE FABRIC

LEGEND

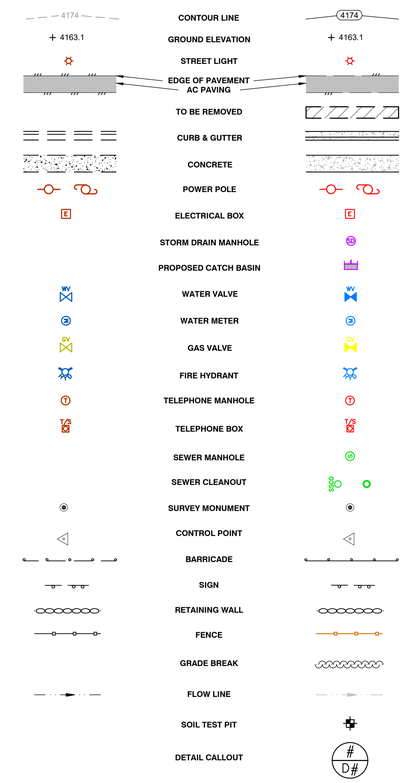

STRUCTURAL NOTES:

1. DESIGN INFORMATION AND LIVE LOADS USED:
   - a. 2018 INTERNATIONAL BUILDING CODE (IBC) INCLUDING APPENDICES C,E,G,H,I,J,K
   - b. 2018 INTERNATIONAL RESIDENTIAL CODE (IRC) BUILDING & ELECTRICAL CHAPTERS ONLY INCLUDING APPENDICES H,J,K,Q
   - c. 2017 NATIONAL ELECTRIC CODE (NEC)
   - d. 2018 UNIFORM MECHANICAL CODE (UMC)
   - e. 2018 UNIFORM PLUMBING CODE (UPC)
   - f. 2018 EDITION INTERNATIONAL EXISTING BUILDING CODE (IEBC)
   - g. FLOOR DEAD LOAD 15 PSF
   - h. FLOOR LIVE LOAD 40 PSF
   - i. ROOF DEAD LOAD 15 PSF
   - j. ROOF LIVE LOAD 30 PSF
   - k. ROOF SNOW LOAD 10 PSF
     - +10 PSF
     - FLAT ROOF SNOW LOAD 20 PSF
     - SNOW EXPOSURE FACOR
     - SNOW LOAD IMPORTANCE FACTOR
   - l. GROUND SNOW LOAD 20 PSF
   - m. WIND 115 (VULT, EXPOSURE C)
   - n. SEISMIC SDS = 0.481, SD1 = 0.235, SITE CLASS D, I = 1.0
   - o. FROST DEPTH 36" MINIMUM (VERTICAL)
   - p. SOIL BEARING PRESSURE 1500 LBS. MAXIMUM WITHOUT A DESIGNED SOILS REPORT
   - q. GROUND SNOW LOAD 50 PSF
   - r. 1603.1.3 ROOF SNOW LOAD DATA. THE GROUND SNOW LOAD, P_g, SHALL BE INDICATED. IN AREAS WHERE THE GROUND SNOW LOAD, P_g, EXCEEDS 10 POUNDS PER SQUARE FOOT (PSF) (0.479KN/M²), THE FOLLOWING ADDITIONAL INFORMATION SHALL ALSO BE PROVIDED, REGARDLESS OF WHETHER SNOW LOADS GOVERN THE DESIGN OF THE ROOF:
     - FLAT-ROOF SNOW LOAD, P_f,
     - SNOW EXPOSURE FACTOR, C_e,
     - SNOW LOAD IMPORTANCE FACTOR, I_s.
2. FOUNDATION:
   - a. COLUMN FOUNDATIONS ARE TO BE FOUNDED PER THE SUPPLIED DETAILS & COMPACTED STRUCTURAL FILL.
   - b. FOOTINGS ARE DESIGNED FOR A MAXIMUM ALLOWABLE SOIL BEARING PRESSURE OF 1500 PSF WITH ALLOWABLE INCREASES.
   - c. SLOPE ALL FINISH GRADE SURFACES AWAY FROM BUILDING A MINIMUM OF 6 INCHES IN TEN FEET TO PROVIDE DRAINAGE.
   - d. SPREAD FOOTINGS ARE TO BE FOUNDED ON THE NATURAL SOIL OR COMPACTED STRUCTURAL FILL. SPREAD FOOTINGS ARE DESIGNED FOR A MAXIMUM ALLOWABLE SOIL BEARING PRESSURE OF 1500 PSF WITH ALLOWABLE INCREASES.
   - e. SLOPE ALL FINISH GRADE SURFACES AWAY FROM BUILDING A MINIMUM OF 6 INCHES IN 10 FEET TO PROVIDE DRAINAGE.
3. CONCRETE: FIBER REINFORCED PORTLAND CEMENT CONCRETE (PCC) SHALL HAVE THE FOLLOWING CHARACTERISTICS:
   - f. 4000 PSI COMPRESSIVE STRENGTH @ 28 DAYS,
   - g. MINIMUM 6 SACKS OF CEMENT PER 1 CUBIC YARD
   - h. MAXIMUM WATER/CEMENT RATIO OF .45
   - i. AIR ENTRAINMENT OF 6% ±1.5%, SLUMP
4. ALL EXPANSION JOINTS ½"WIDE SHALL BE PER ACI SP-4 AND ACI-224
5. REINFORCING STEEL SHALL CONFORM TO ASTM 615.
   - a. ALL BARS #4 AND LARGER SHALL BE GRADE 60 AND #3 BARS SHALL BE GRADE 60.
   - b. SHOP DRAWINGS FOR FABRICATION AND ERECTION OF ALL REINFORCING AND EMBEDDED ITEMS SHALL BE REQUIRED.
   - c. REINFORCING SHALL BE CONTINUOUS THROUGH ALL CONSTRUCTION JOINTS.
   - d. MINIMUM CLEAR CONCRETE PROTECTION FOR REINFORCEMENT SHALL BE AS FOLLOWS UNLESS NOTED OTHERWISE:
     - 3 INCHES FOR CONCRETE PLACED DIRECTLY AGAINST EARTH.
     - 1-1/2 INCHES FOR FORMED SURFACES EXPOSED TO WEATHER OR EARTH.
     - CENTER OF SLAB FOR SLABS ON GRADE.
   - e. LAPPED SPLICES SHALL BE DESIGNED IN CONFORMANCE WITH THE CURRENT IBC. NO TWO ADJACENT BARS ARE SPLICED IN THE SAME LOCATION UNLESS SHOWN OTHERWISE.
6. INSTALL ICE AND WATER SHIELD TO ALL ROOF EDGES PER BUILDING CODE

ENGINEERING
742 D STREET
ELKO, NEVADA 89801
TEL: (775) 738 - 3113
FAX: (775) 738 - 6199
WWW.AMENGINEERING.PRO
• EGINEERING DESIGN & ANALYSIS
• CONSTRUCTION MANAGEMENT
• QA / QC INSPECTIONS
• CONSTRUCTION SURVEYING
• MATERIALS TESTING

REGISTERED PROFESSIONAL ENGINEER
AARON K. MARTINEZ
Exp. 12-31-25
CIVIL
NEVADA
2/1/2024

CITY OF ELKO

ARPA - ELKO MOUNTAIN BOOSTER PUMP & WATERLINE NOTES & LEGENDS

ELKO COUNTY NEVADA

REV	DATE	DESCRIPTION	BY
1	1/4/24	NDEP REVIEW (EL-0007277-23)D	RSR

C1.1

DATE: FEBRUARY 2024
DRAWN BY: RSR
DESIGNED BY: AKM
CHECKED BY: AKM
JOB NO.: 379.000

P:\379.000 - Elko Mountain Tank Site\Engineering\Q-Civil 3D.DWG\379.000 Design-Moved.dwg,TITLE GRAPHIC-C1.1,
02/12/2024 07:45 am rosanna

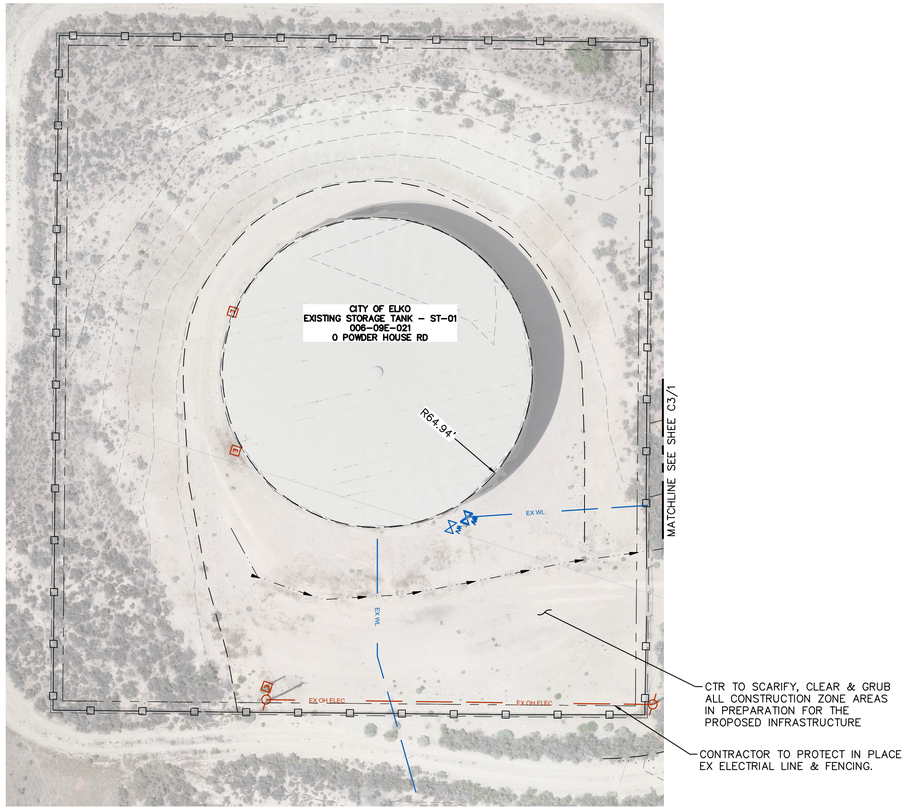

STA: 0+00 TO 00+08 DEMOLITION (1)
1" = 30'-0"

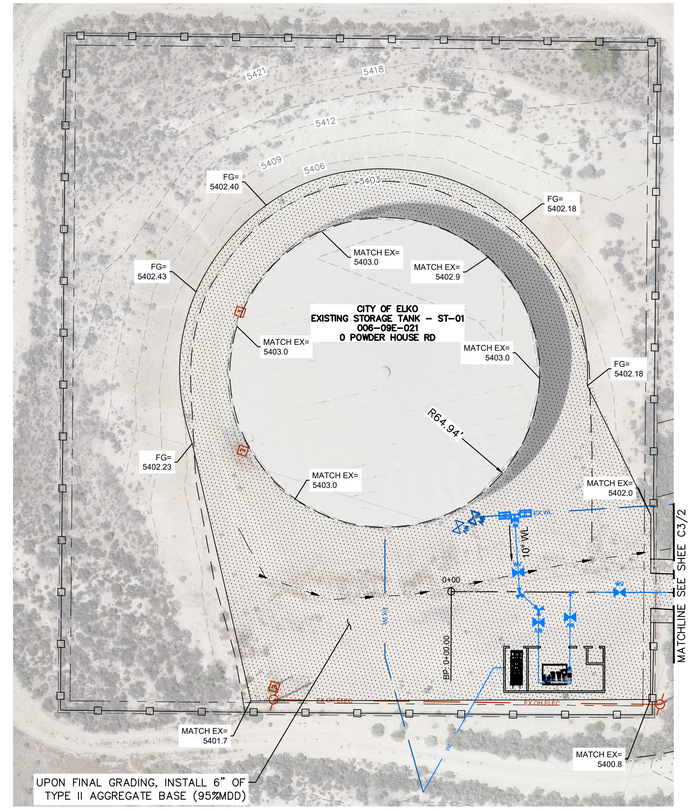

STA: 0+00 TO 00+08 GRADING (2)
1" = 30'-0"

GRAPHIC SCALE
SCALE IN FEET
30 0 30 60

P:\379.000 – Elko Mountain Tank Site\Engineering\0-Civil 3D\DWG\379.000 Design.dwg,C2,
02/13/2024 12:03 pm rosanna

AMM ENGINEERING
742 D STREET
ELKO, NEVADA 89801
TEL: (775) 738 - 3113
FAX: (775) 738 - 8599
WWW.AMENGINEERING.PRO
• ENGINEERING DESIGN & ANALYSIS
• CONSTRUCTION MANAGEMENT
• QA / QC INSPECTIONS
• CONSTRUCTION SURVEYING
• MATERIALS TESTING

NEVADA PROFESSIONAL ENGINEER
AARON K. MARTINEZ
Exp. 12-31-25
CIVIL
No. 21636
2/7/2024

CITY OF ELKO

ARPA - ELKO MOUNTAIN BOOSTER PUMP & WATERLINE DEMO / GRADING PLAN

ELKO COUNTY NEVADA

REV	DATE	DESCRIPTION	BY

C2

DATE:	FEBRUARY 2024
DRAWN BY:	RSR
DESIGNED BY:	AKM
CHECKED BY:	AKM
JOB NO.:	379.000

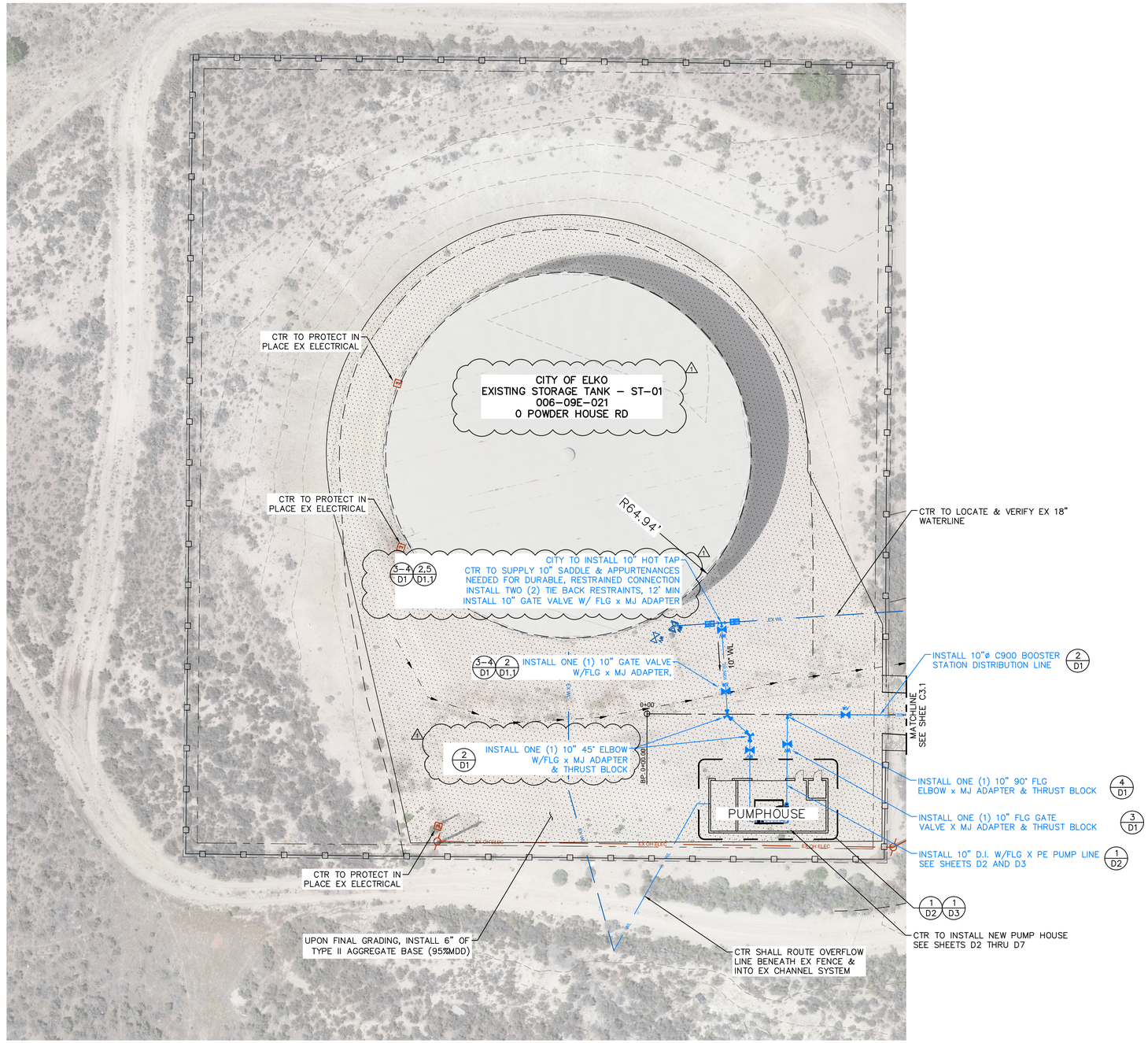

STA: 1+00 TO 2+25 BOOSTER (1)

1" = 20'-0"

GRAPHIC SCALE
SCALE IN FEET
20 0 20 40

P:\379.000 – Elko Mountain Tank Site\Engineering\0-Civil 3D.DWG\379.000 Design.dwg,C2.1,
02/13/2024 12:05 pm rosamna

AM ENGINEERING
742 D STREET
ELKO, NEVADA 89801
TEL: (775) 738 - 3113
FAX: (775) 738 - 8598
WWW.AMENGINEERING.PRO
• ENGINEERING DESIGN & ANALYSIS
• CONSTRUCTION MANAGEMENT
• QA / QC INSPECTIONS
• CONSTRUCTION SURVEYING
• MATERIALS TESTING

NEVADA PROFESSIONAL ENGINEER
AARON K. MARTINEZ
Exp. 12-31-25
CIVIL
No. 21636
2/7/2024

CITY OF ELKO

ARPA - ELKO MOUNTAIN BOOSTER PUMP & WATERLINE PLAN AND PROFILE

ELKO COUNTY NEVADA

REV	DATE	DESCRIPTION	BY
1	1/4/24	NDEP REVIEW (EL-0007277-23)D	RSR

C2.1

DATE:	FEBRUARY 2024
DRAWN BY:	RSR
DESIGNED BY:	AKM
CHECKED BY:	AKM
JOB NO.:	379.000

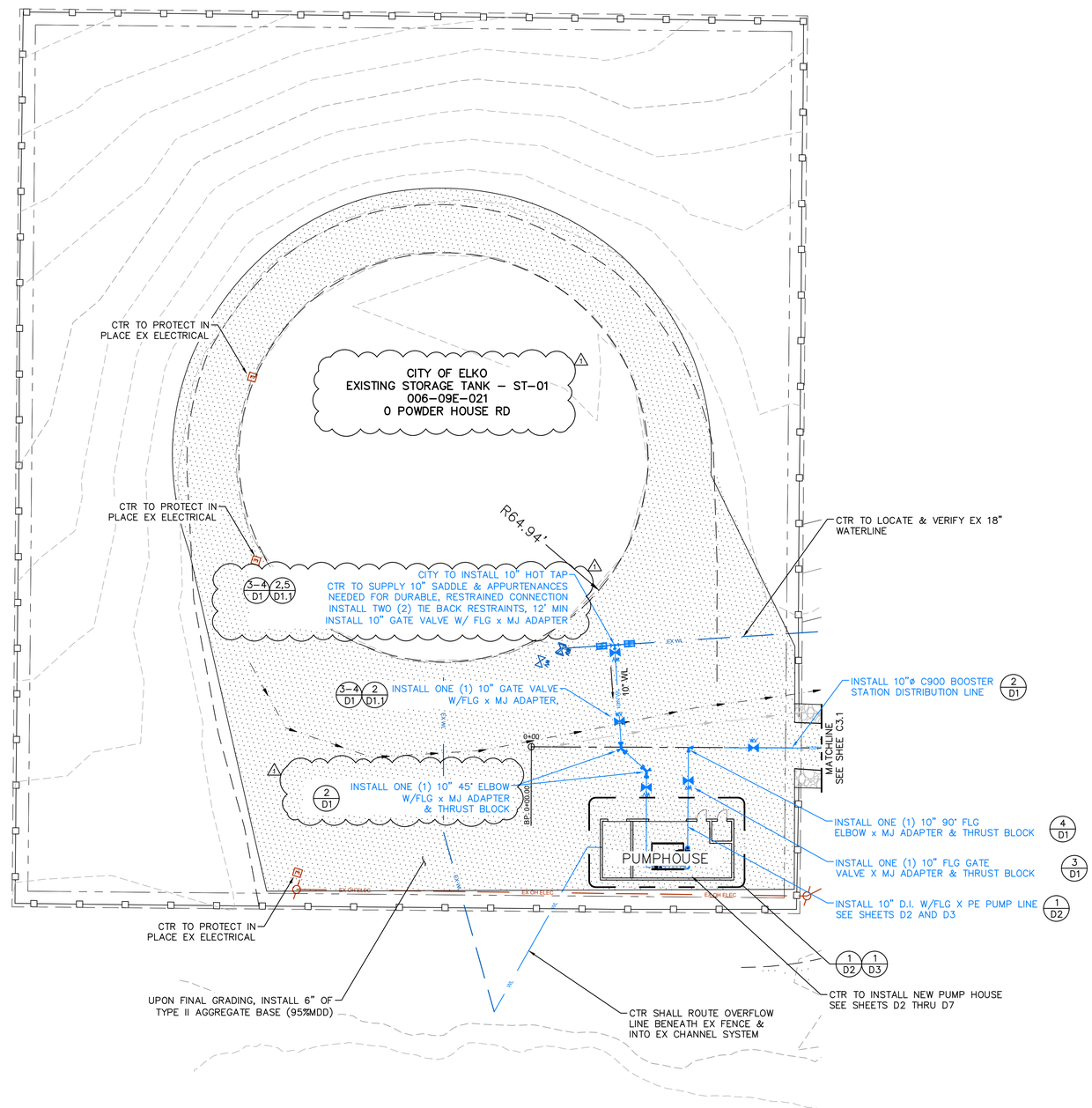

STA: 1+00 TO 2+25 BOOSTER (1)

1" = 20'-0"

GRAPHIC SCALE

SCALE IN FEET

20 0 20 40

P:\379.000 – Elko Mountain Tank Site\Engineering\0-Civil 3D\DWG\379.000 Design.dwg,C2.1,
02/13/2024 11:57 am rosanna

AM ENGINEERING
742 D STREET
ELKO, NEVADA 89801
TEL: (775) 738 - 3113
FAX: (775) 738 - 8598
WWW.AMENGINEERING.PRO
• ENGINEERING DESIGN & ANALYSIS
• CONSTRUCTION MANAGEMENT
• QA / QC INSPECTIONS
• CONSTRUCTION SURVEYING
• MATERIALS TESTING

AARON K. MARTINEZ
Exp. 12-31-25
CIVIL
No. 21636
2/7/2024

CITY OF ELKO

ARPA - ELKO MOUNTAIN BOOSTER PUMP & WATERLINE PLAN AND PROFILE

ELKO COUNTY NEVADA

REV	DATE	DESCRIPTION	BY
1	1/4/24	NDEP REVIEW (EL-0007277-23)D	RSR

C2.1

DATE:	FEBRUARY 2024
DRAWN BY:	RSR
DESIGNED BY:	AKM
CHECKED BY:	AKM
JOB NO.:	379.000

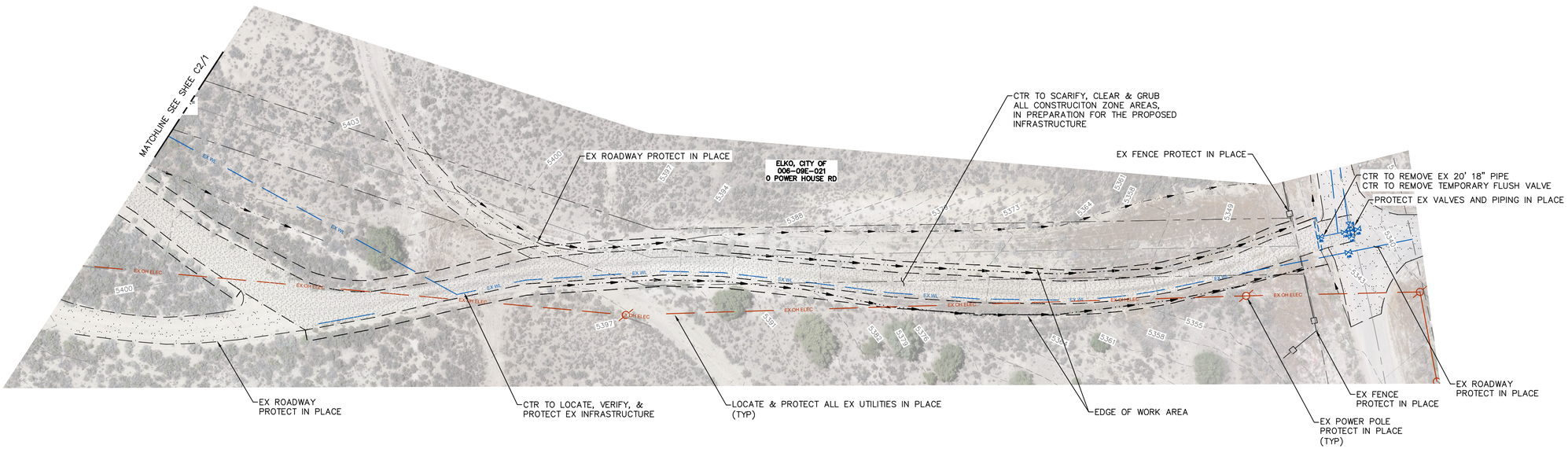

STA: 0+87 TO 7+55.00 DEMOLITION (1)
1" = 30'-0"

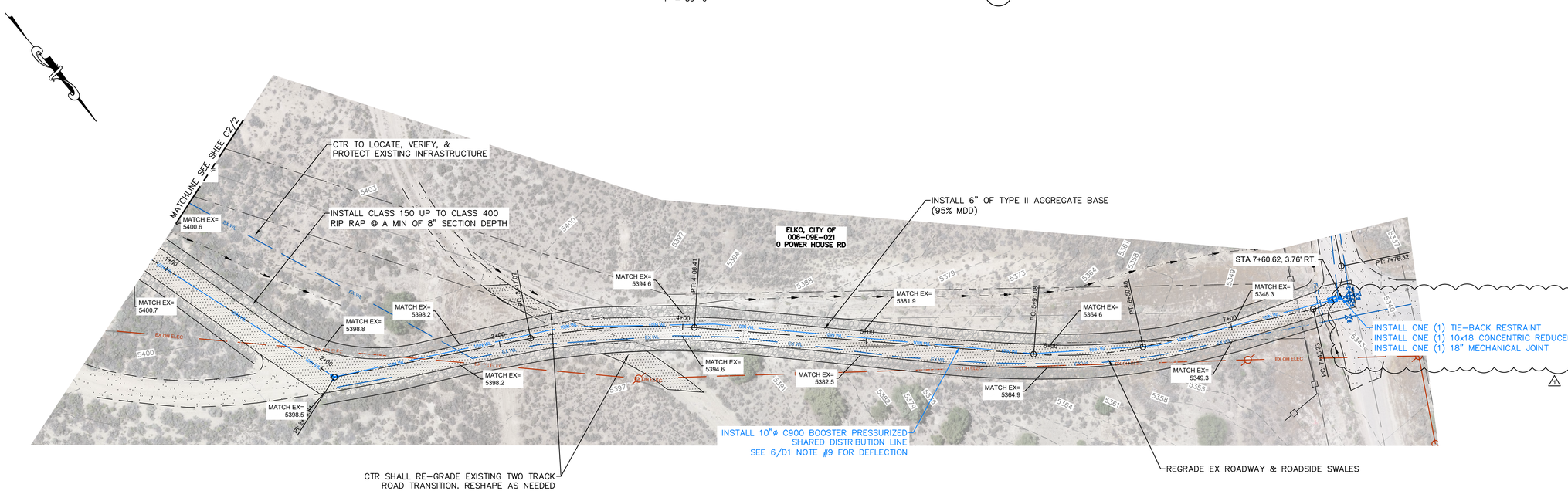

STA: 0+87 TO 7+55.00 GRADING (2)
1" = 30'-0"

GRAPHIC SCALE
SCALE IN FEET
30 0 30 60

P:\379.000 - Elko Mountain Tank Site\Engineering\0-Civil 3D\DWG\379.000 Design-Moved.dwg,C3,
02/12/2024 03:53 pm rosanna

AMM ENGINEERING
742 D STREET
ELKO, NEVADA 89801
TEL: (775) 738 - 3113
FAX: (775) 738 - 8598
WWW.AMENGINEERING.PRO
• ENGINEERING DESIGN & ANALYSIS
• CONSTRUCTION MANAGEMENT
• QA / QC INSPECTIONS
• CONSTRUCTION SURVEYING
• MATERIALS TESTING

REGISTERED PROFESSIONAL ENGINEER
AARON K. MARTINEZ
Exp. 12-31-25
CIVIL
STATE OF NEVADA
No. 21634
2/7/2024

CITY OF ELKO

ARPA - ELKO MOUNTAIN BOOSTER PUMP & WATERLINE DEMO / GRADING PLAN

ELKO COUNTY
ELKO
NEVADA

REV	DATE	DESCRIPTION	BY

C3

DATE:	FEBRUARY 2024
DRAWN BY:	RSR
DESIGNED BY:	AKM
CHECKED BY:	AKM
JOB NO.:	379.000

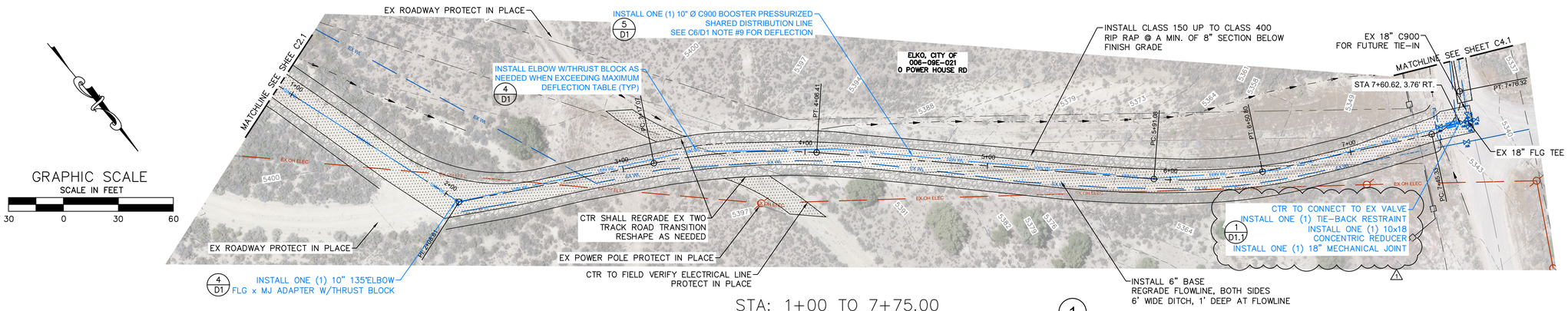

STA: 1+00 TO 7+75.00 (1)

1" = 30'-0"

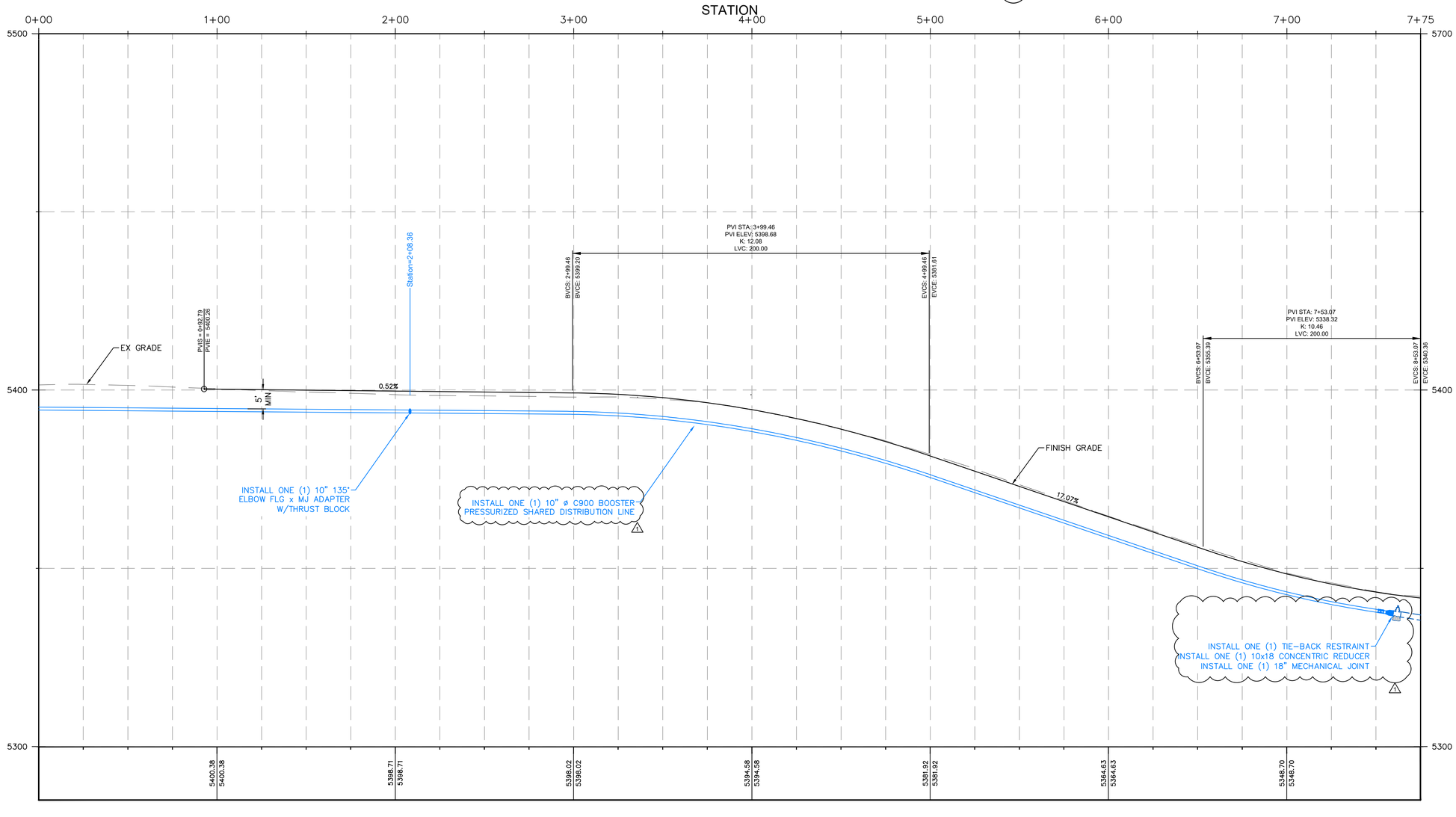

ENGINEERING
742 B STREET
ELKO, NEVADA 89801
TEL: (775) 738 - 3113
FAX: (775) 738 - 6199
WWW.AMENGINEERING.PRO
• EGINEERING DESIGN & ANALYSIS
• CONSTRUCTION MANAGEMENT
• QA / QC INSPECTIONS
• CONSTRUCTION SURVEYING
• MATERIALS TESTING

CITY OF ELKO

ARPA - ELKO MOUNTAIN BOOSTER PUMP & WATERLINE PLAN AND PROFILE

ELKO COUNTY

ELKO

NEVADA

REV	DATE	DESCRIPTION	BY
1	1/4/24	NDEP REVIEW (EL-0007277-23)D	RSR

C3.1

DATE:	FEBRUARY 2024
DRAWN BY:	RSR
DESIGNED BY:	AKM
CHECKED BY:	AKM
JOB NO.:	379.000

P:\379.000 - Elko Mountain Tank Site\Engineering\C-Civil 3D\DWG\379.000 Design-Moved.dwg,C3.1,
02/12/2024 4:41:02 pm rosanna

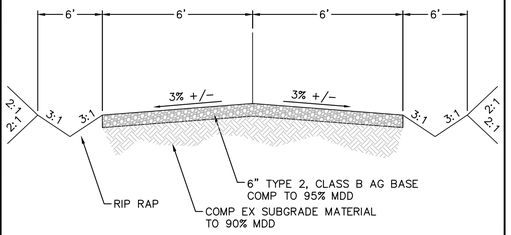

NOTES:

1. BASED UPON THE "R" VALUE OR C.B.R. TESTING, THE BASE THICKNESS MAY INCREASE. FOR ARTERIAL ROADWAYS, CURRENT AND FUTURE TRAFFIC VOLUMES NEED TO BE CONSIDERED IN THE DESIGN OF THE STRUCTURAL SECTION OF THE ROADWAY.
2. THE OPTIMUM CROSS-SLOPE OF THE ROADWAY SHALL BE 3% WITH A MINIMUM OF 2%.

BASE ROADWAY SECTION (1)

N.T.S.

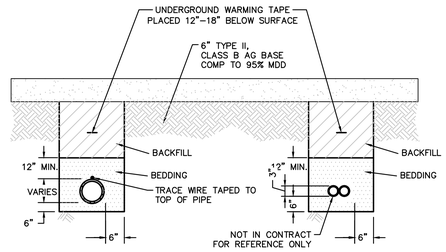

DUCTILE IRON PIPE, PVC, PE & HDPE PIPE

NOTES:

1. WATER DENSIFIED BACKFILL AND TUNNELING SHALL NOT BE ALLOWED.
2. BACKFILL SHALL MEET THE REQUIREMENTS FOR CLASS "E" BACKFILL WITH NO ROCKS SIZED OVER 4", COMPACTED IN 6" (MAX.) LIFTS TO 90% (MIN.) RELATIVE COMPACTION.
3. BEDDING MATERIAL FOR THE FOLLOWING PIPE SHALL MEET THE REQUIREMENTS OF SECTION 200 & 305 OF THE LATEST EDITION OF THE STANDARD SPECIFICATIONS FOR PUBLIC WORKS CONSTRUCTION AND COMPACTED TO A MINIMUM 90% RELATIVE COMPACTION.
   A) DUCTILE IRON PIPE – CLASS "C"
   B) ALL OTHER PIPE – CLASS "A"
4. FOR TRENCHES & EXCAVATIONS LOCATED WITHIN ROADWAY SECTION, SEE PAVEMENT PATCH DETAIL.
5. ALL TRENCHES AND EXCAVATIONS SHALL CONFORM TO THE LATEST EDITION OF O.S.H.A. AND M.U.T.C.D. REQUIREMENTS.
6. NATIVE MATERIAL MUST BE APPROVED BY THE CITY OF ELKO ENGINEER PRIOR TO USING AS BACKFILL OR BEDDING.
7. UNDERGROUND WARNING TAPE SHALL BE METALLIC AND APPROPRIATLY LABELED AND COLORED.

TRENCH DETAIL (2)

N.T.S.

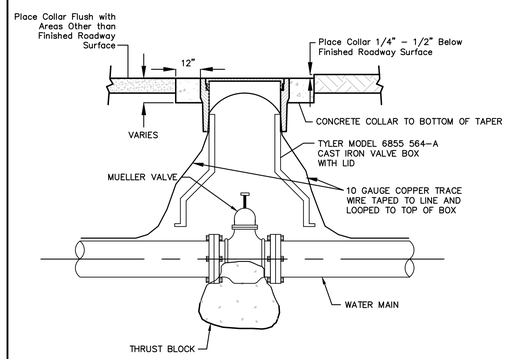

NOTES:

1. CONCRETE SHALL MEET THE REQUIREMENTS OF SECTION 337.10 OF THE LATEST EDITION OF THE STANDARD SPECIFICATIONS FOR PUBLIC WORKS CONSTRUCTION, UNLESS OTHERWISE SPECIFIED.
2. VALVE COLLAR SHALL BE SET ¼" TO ½" BELOW FINISHED CONCRETE OR BITUMINOUS SURFACE. VALVE COLLARS IN ALL OTHER AREAS SHALL BE SET FLUSH WITH FINISHED GRADE, UNLESS OTHERWISE SPECIFIED.
3. CONCRETE COLLAR REQUIRED WHEN VALVE IS NOT LOCATED IN CONCRETE OR BITUMINOUS SURFACE.

VALVE DETAIL (3)

N.T.S.

TYPE OF FITTING	90° BEND	45° BEND	11-1/4° OR 22-1/2° BEND	TEE OR DEAD END
TYPICAL INSTALLATION	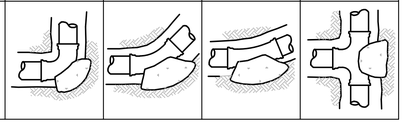			

THRUST BLOCK BEARING AREA (SQ. FT.)

TYPE OF FITTING		90° BEND	45° BEND	11-1/4° OR 22-1/2° BEND	TEE OR DEAD END	TEE WITH PLUG	CROSS WITH PLUG
SIZE OF PIPE	4"	2	1	1	2	2	2
	6"	4	4	2	4	4	4
	8"	7	4	2	5	7	7
	10"	12	6	3	8	12	12
	12"	16	10	5	12	16	16
	14"	20	12	6	14	20	20
	16"	27	15	8	18	27	27
	18"	45	25	13	32	45	45
	24"	65	35	18	46	65	65

TYPE OF FITTING	CROSS WITH PLUG	TEE WITH PLUG
TYPICAL INSTALLATION	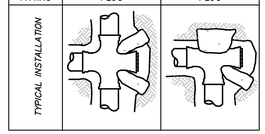	

NOTES:

1. CONCRETE FOR THRUST BLOCKS SHALL HAVE A 28 DAY STRENGTH OF 3000 PSI OR GREATER.
2. AREAS GIVEN ARE FOR CLASS 150 PIPE AT A TEST PRESSURE OF 150 PSI, WITH 2000 PSF BEARING CAPACITY. INSTALLATIONS USING DIFFERENT PIPE, TEST PROCEDURES, AND/OR SOIL TYPES SHOULD ADJUST AREAS ACCORDINGLY, SUBJECT TO THE APPROVAL OF THE ENGINEER.
3. THRUST BLOCKS ARE TO BE POURED AGAINST UNDISTURBED SOIL.
4. JOINTS AND FACES OF PLUGS TO BE KEPT CLEAR OF CONCRETE.
5. BOLT ON SADDLE TEES ARE EXEMPT FROM THRUST BLOCK REQUIREMENTS IF STATED IN MANUFACTURER'S TABULATED DATA.

THRUST BLOCK DETAILS (4)

N.T.S.

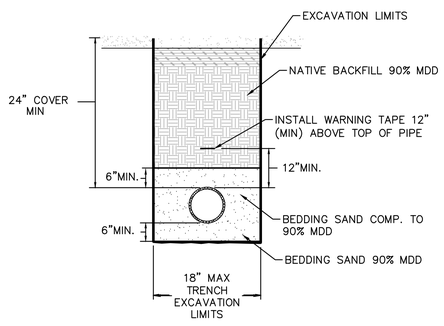

NOTES

1. BEDDING SHALL MEET THE REQUIREMENTS FOR CLASS "A" BACKFILL AS SHOWN IN SUBSECTION 200.03.02 OF THE STANDARD SPECIFICATIONS FOR PUBLIC WORKS CONSTRUCTION. MATERIAL SHALL BE PLACED IN LIFT THICKNESSES AND MECHANICALLY COMPACTED IN ACCORDANCE WITH SECTION 305 OF THE STANDARD SPECIFICATIONS FOR PUBLIC WORKS CONSTRUCTION.
2. CLASS "C" BACKFILL WITH FILTER FABRIC MAY BE USED TO SUPPORT BEDDING IN HIGH GROUND-WATER OR UNSTABLE SOIL CONDITIONS WITH THE APPROVAL OF THE ENGINEER OF RECORD.
3. SHORING OR SLOPED CUT SLOPES MAY BE NECESSARY. ALL EXCAVATIONS SHALL CONFORM TO THE MOST RECENT OSHA REQUIREMENTS.
4. PLACE WARNING TAPE 1 FT. ABOVE UTILITY LINE.
5. EARTHEN FILL SHALL BE PLACED AND PRESSED FIRMLY IN PLACE TO ENSURE SINKING DOES NOW OCCUR.
6. FOR THE PURPOSE OF PAYMENT; EXCAVATION AND BACKFILL QUANTITIES ARE BASED ON THESE STANDARD DRAWINGS, AND NO ADDITIONAL COMPENSATION WILL BE MADE.

TRENCH EXCAVATION AND BACKFILL (5)

N.T.S.

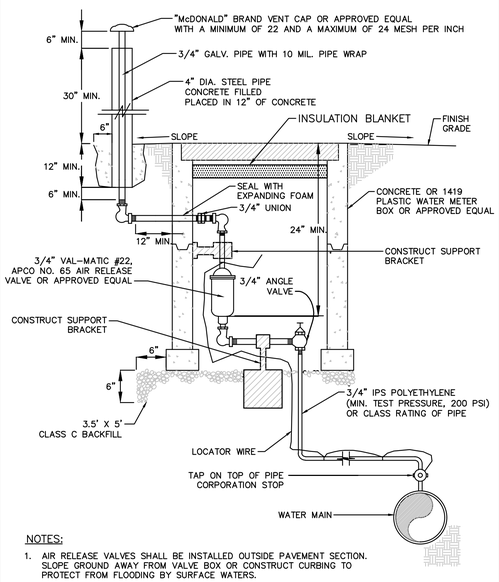

NOTES:

1. AIR RELEASE VALVES SHALL BE INSTALLED OUTSIDE PAVEMENT SECTION. SLOPE GROUND AWAY FROM VALVE BOX OR CONSTRUCT CURBING TO PROTECT FROM FLOODING BY SURFACE WATERS.
2. ALL PIPES SHALL HAVE POSITIVE SLOPE FROM MAIN LINE TO AIR RELEASE VALVE.

POTABLE WATER AIR RELEASE VALVE (6)

N.T.S.

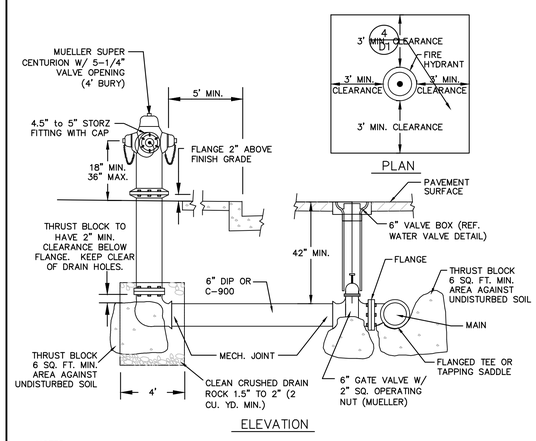

NOTES:

1. HYDRANTS SHALL BE ENAMELED RED.
2. ALL HYDRANTS SHALL HAVE (2) 2.5" PUMPER OUTLETS (MALE THREAD WITH CAP & CHAIN) AND (1) 4.5" STEAMER PUMPER OUTLET WITH 4.5" – 5" STORZ FEMALE CONNECT WITH CAP & CHAIN. ALL THREADS SHALL BE SPECIFIED FOR AMERICAN NATIONAL HOSE COUPLING.
3. OPERATING NUT SHALL BE 1.5" PENTAGON.
4. INSPECTION BY A CITY OF ELKO FIRE OR PUBLIC WORKS REPRESENTATIVE IS REQUIRED PRIOR TO BACKFILLING.
5. FOR FINAL ACCEPTANCE, A FLOW, FLUSH, & HYDROSTATIC TEST SHALL BE WITNESSED BY CITY OF ELKO FIRE DEPT./UTILITY DIRECTOR OR PUBLIC WORKS REPRESENTATIVE, PER FORM 13-97, "MATERIALS & TEST CERTIFICATE FOR UNDERGROUND PIPING".
6. ALL HYDRANT SHALL INCLUDE APPROVED TRAFFIC PROTECTION, 3' MINIMUM CLEARANCES, AND POSITIVE DRAINAGE AWAY FROM THE HYDRANT.

FIRE HYDRANT (7)

N.T.S.

AMM ENGINEERING
742 D STREET
ELKO, NEVADA 89801
TEL: (775) 738 - 3113
FAX: (775) 738 - 8199
WWW.AMENGINEERING.PRO
• ENGINEERING DESIGN & ANALYSIS
• CONSTRUCTION MANAGEMENT
• QA / QC INSPECTIONS
• CONSTRUCTION SURVEYING
• MATERIALS TESTING

PROFESSIONAL ENGINEER
AARON K. MARTINEZ
Exp. 12-31-25
CIVIL
STATE OF NEVADA
No. 21635
2/7/2024

CITY OF ELKO

ARPA - ELKO MOUNTAIN BOOSTER PUMP & WATERLINE DETAILS

ELKO COUNTY — NEVADA

REV	DATE	DESCRIPTION	BY

D1

DATE:	FEBRUARY 2024
DRAWN BY:	RSR
DESIGNED BY:	AKM
CHECKED BY:	AKM
JOB NO.:	379.000

P:\379.000 - Elko Mountain Tank Site\Engineering\0-Civil 3D\DWG\379.000 Design-Moved.dwg,D1,
02/12/2024 08:19 am rosanna

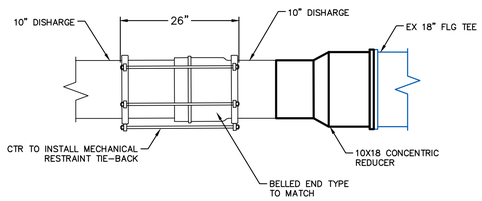

NOTES:

1. SEE DETAIL #2 & #3 FOR ADDITIONAL TIE-BACK RESTRAINT INFORMATION

STA: 7+60.62
10" DISHARGE TO EX CONNECTION (1)
N.T.S.

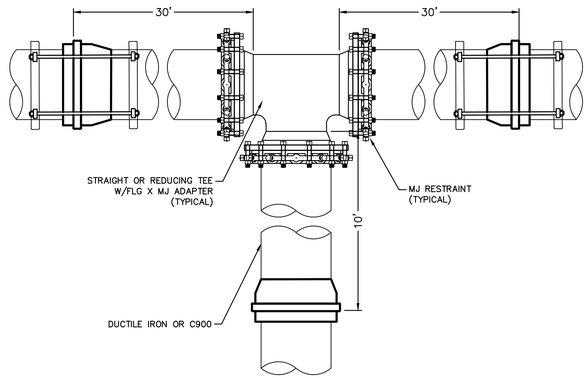

NOTES:

1. ALL JOINTS WITHIN THE CALCULATED LENGTH MUST BE RESTRAINED
2. IF THE DISTANCE BETWEEN FITTINGS IS LESS THAN OR EQUAL TO THE CALCULATED RESTRAINT LENGTH, RESTRAIN ALL JOINTS BETWEEN THOSE FITTINGS.

MECHANICAL JOINT RESTRAINT (2)
N.T.S.

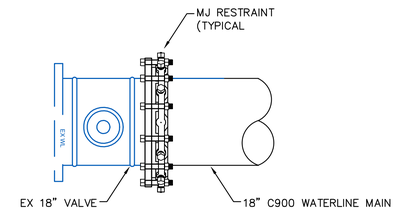

STA: 21+66.13
EX VALVE TO MAINLINE CONNECTION (3)
N.T.S.

1. WATER MAIN SHUTDOWNS/INTERRUPTION OF WATER/FIRE SERVICE; OBTAIN TENTATIVE APPROVAL FROM CITY OF ELKO WATER AND SEWER DEPARTMENT PRIOR TO PLANNING A SHUTDOWN. APPROVAL IS REQUIRED ONE (1) WORKING DAY PRIOR TO NOTIFICATION OF CUSTOMERS. COMMERCIAL CUSTOMERS SHALL RECEIVE TWO (2) WORKING DAYS WRITTEN AND VERBAL NOTICE OF A SHUTDOWN. SPECIAL ARRANGEMENTS INCLUDING NIGHT TIME SHUTDOWNS MAY BE REQUIRED OF THE CONTRACTOR TO ACCOMMODATE CUSTOMER OPERATIONS. RESIDENTIAL CUSTOMERS SHALL RECEIVE 24 HOURS WRITTEN NOTICE. WHEN WORK IS PERFORMED BY STAFF, THE CITY IS RESPONSIBLE FOR THE NOTIFICATION. THE CONTRACTOR IS RESPONSIBLE IN ALL OTHER CASES. A LIST SHALL BE KEPT BY THE RESPONSIBLE PARTY LISTING THE DATE, TIME, AND ADDRESS OF ALL PERSONS NOTIFIED. THE PERSON NOTIFIED SHALL BE INCLUDED ON THE LIST FOR ALL COMMERCIAL CUSTOMERS. CONTACT CITY OF ELKO WATER AND SEWER DEPARTMENT FOR PHONE NUMBERS WHEN COMMERCIAL CUSTOMERS CANNOT BE LOCATED. THE CONTRACTOR WILL BE SUBJECT TO DAMAGE CLAIMS SHOULD THEY FAIL TO NOTIFY CUSTOMERS OR MAINTAIN DOCUMENTATION OF NOTIFICATION OF CUSTOMERS. THE TOTAL TIME OF ANY WATER SERVICE INTERRUPTION IS LIMITED TO FOUR (4) HOURS MAXIMUM. THE CONTRACTOR SHALL NOT OPERATE ANY EXISTING WATER VALVES. CONTRACTOR SHALL MAKE A WRITTEN REQUEST, TO THE WATER OPERATIONS CHIEF.

2. WATER MAINS (6 INCH THRU 12 INCH) SHALL BE PVC C900, DR-18 (MINIMUM WALL THICKNESS) UNLESS HIGHER PRESSURE IS SPECIFIED ON THE PLANS. WATER MAINS (OVER 12 INCH) SHALL BE PVC 900, BR-18 (MINIMUM WALL THICKNESS) UNLESS HIGHER PRESSURE IS SPECIFIED ON THE PLANS. WATER SERVICES 2 INCHES OR LESS SHALL BE CTS, PE TUBING MINIMUM 200 PSI; WATER SERVICES 3 INCHES OR GREATER SHALL BE 4 INCH MINIMUM DIAMETER PVC C900, DR 18 OR AS SPECIFIED ON THE PLANS.

3. THE PROJECT 18" MAINLINE SYSTEM SHALL BE C900, "DR-18"

4. MAINTAIN 24 INCHES RADIAL CLEARANCE FROM NVE GAS AND ELECTRIC FACILITIES, AND SEPARATED BY VIRGIN SOIL DURING PARALLEL INSTALLATIONS. ANY EXCEPTIONS/DEVIATIONS FROM THESE REQUIREMENTS MUST BE APPROVED BY THE APPROPRIATE NVE ENGINEERING DEPARTMENT.

5. ALL WATER MAIN, WATER/FIRE SERVICE, AND BACKFLOW PREVENTION INSPECTIONS AND TESTING MUST BE APPROVED PRIOR TO APPROVAL OF ANY CERTIFICATE OF OCCUPANCY.

6. DISINFECTION TABLETS SHALL BE PLACED USING TITEBOND MULTI-PURPOSE CLEAR 100% SILICONE OR APPROVED EQUAL FOOD GRADE SILICONE

7. FIBER-REINFORCED PORTLAND CEMENT CONCRETE (P.C.C.) SHALL HAVE THE FOLLOWING CHARACTERISTICS:
   - 4,000 PSI MIN COMPRESSIVE STRENGTH @ 28 DAYS
   - MIN 6 SACKS OF CEMENT PER CUBIC YARD WITH A MAX WATER/CEMENT RATION OF 0.45 AIR ENTRAINMENT 6% +/-1.5%
   - SLUMP AT 1 TO 4 INCHES
   - ALL CONCRETE COLLARS

9. AWWA C900 PIPE – A MAXIMUM OF ONE DEGREE OF DEFLECTION IS ALLOWED AT EACH JOINT. THE EQUIVALENT RADIUS OF CURVATURE FOR 20-FOOT PIPE LENGTHS IS 1150 FEET. FOR CHANGES IN DIRECTION GREATER THAN ONE DEGREE PER JOINT, FITTINGS SHOULD BE USED.

WATERLINE NOTES (6)
N.T.S.

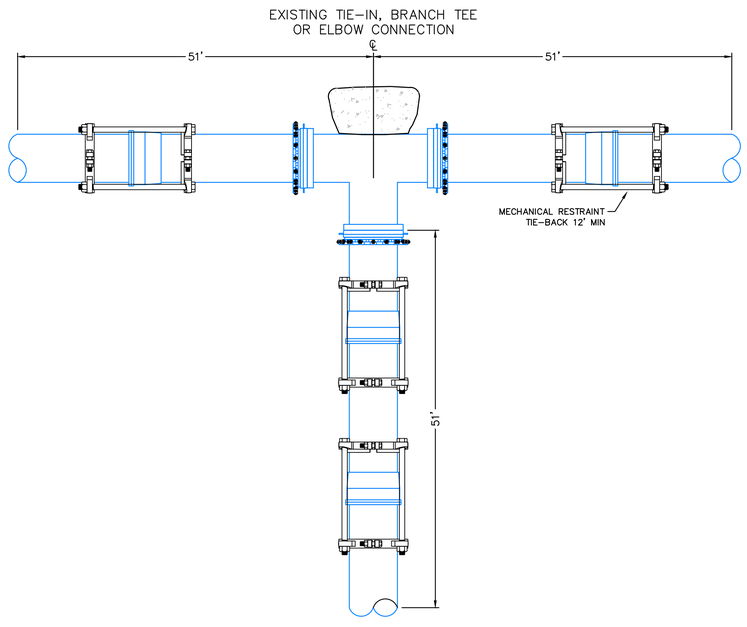

MECHANICAL JOINT DETAIL (5)
N.T.S.

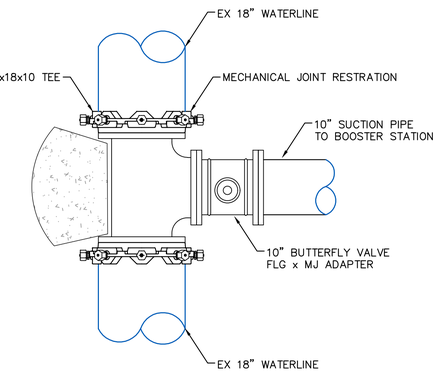

NOTES:

1. REFER TO DETAIL 5/D1.1 FOR ADDITIONAL MECHANICAL JOINT REQUIREMENTS.

STA: 0+51.95
CONNECTION TO EX WATERLINE (6)
N.T.S.

AMM ENGINEERING
742 D STREET
ELKO, NEVADA 89801
TEL: (775) 738 - 3113
FAX: (775) 738 - 8589
WWW.AMENGINEERING.PRO
• ENGINEERING DESIGN & ANALYSIS
• CONSTRUCTION MANAGEMENT
• QA / QC INSPECTIONS
• CONSTRUCTION SURVEYING
• MATERIALS TESTING

NEVADA PROFESSIONAL ENGINEER
AARON K. MARTINEZ
Exp. 12-31-25
CIVIL
No. 21636
2/7/2024

CITY OF ELKO

ARPA - ELKO MOUNTAIN BOOSTER PUMP & WATERLINE DETAILS

ELKO COUNTY — ELKO — NEVADA

REV	DATE	DESCRIPTION	BY
1	1/4/24	NDEP REVIEW (EL-0007277-23)D	RSR

D1.1

DATE:	FEBRUARY 2024
DRAWN BY:	RSR
DESIGNED BY:	AKM
CHECKED BY:	AKM
JOB NO.:	379.000

P:\379.000 - Elko Mountain Tank Site\Engineering\0-Civil 3D\DWG\379.000 Design-Moved.dwg,D1.1,
02/12/2024 08:22 am rosanna

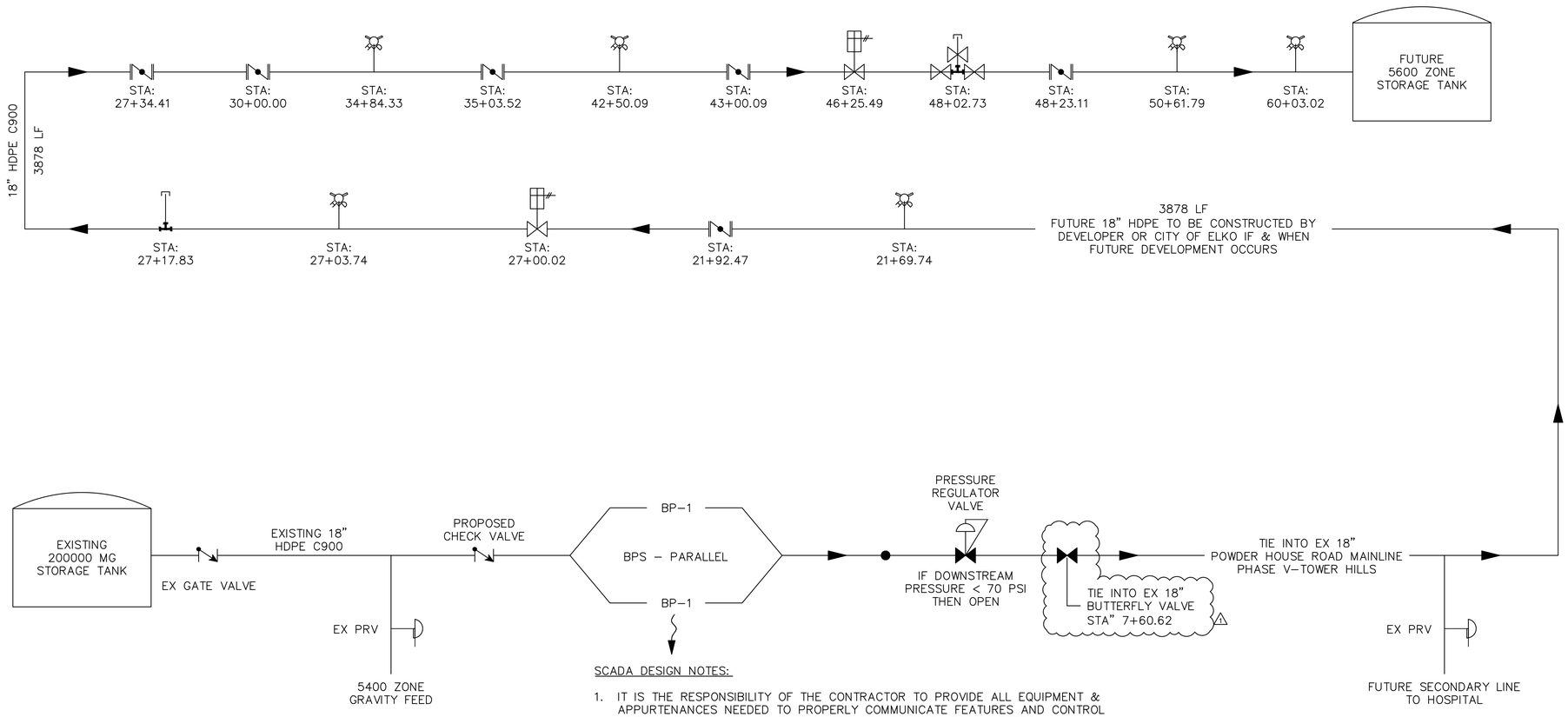

SCADA DESIGN NOTES:

1. IT IS THE RESPONSIBILITY OF THE CONTRACTOR TO PROVIDE ALL EQUIPMENT & APPURTENANCES NEEDED TO PROPERLY COMMUNICATE FEATURES AND CONTROL OPTIONS TO THE CITY OF ELKO WATER DEPARTMENT HEADQUARTERS

2. CONTRACTOR TO PROVIDE THE FOLLOWING ITEMS AT A MINIMUM & EXPECTED TO TRANSMIT IN REAL TIME THE FOLLOWING DATA REQUISITES TO THE CITY OF ELKO WATER DEPARTMENT HEADQUARTERS. INCLUDES EQUIPMENT, WIRELESS TRANSITION, CITY COORDINATION & OPERATION

   - BPS OPERATION SPECIFICS
   - BPS FUNCTIONALITY TO ADJUST / MODIFY PERFORMANCE

3. JOCKEY PUMP SHALL ALTERNATE IN OPERATION

4. MEDIUM DUTY PUMP SHALL ALTERNATE IN OPERATION

5. CONTRACTOR TO ENSURE SCADA AND BPS PLC OPERATE COHESIVELY IN ORDER TO ENSURE PROPER OPERATION. CONTRACTOR TO ENSURE OPERATIONS MEET DESIGN THRESHOLD FOR START & STOP. INCLUDES TRANSITION THEREOF, BETWEEN JOCKEY PUMP, DUTY PUMP, & HIGH FLOW PUMP.
   a. DESIGN POINT JOCKEY PUMP: 60 GPM @ 361' TDH
   b. DESIGN POINT 1: 508 GPM @ 156 PSI
   c. DESIGN POINT 2: 1000 GPM @ 156 PSI

ENGINEERING
742 D STREET
ELKO, NEVADA 89801
TEL: (775) 738 - 3113
FAX: (775) 324 - 6599
WWW.AMENGINEERING.PRO
• ENGINEERING DESIGN & ANALYSIS
• CONSTRUCTION MANAGEMENT
• QA / QC INSPECTIONS
• CONSTRUCTION SURVEYING
• MATERIALS TESTING

CITY OF ELKO

ARPA - ELKO MOUNTAIN BOOSTER PUMP & WATERLINE P&ID DIAGRAM

ELKO COUNTY

ELKO NEVADA

REV	DATE	DESCRIPTION	BY
1	1/4/24	NDEP REVIEW (EL-0007277-23)D	RSR

D1.2

DATE:	FEBRUARY 2024
DRAWN BY:	RSR
DESIGNED BY:	AKM
CHECKED BY:	AKM
JOB NO.:	379.000

P:\379.000 - Elko Mountain Tank Site\Engineering\D-Civil 3D\DWG\379.000 Design-Moved.dwg,D1.2,
02/12/2024 04:16 pm rosanna

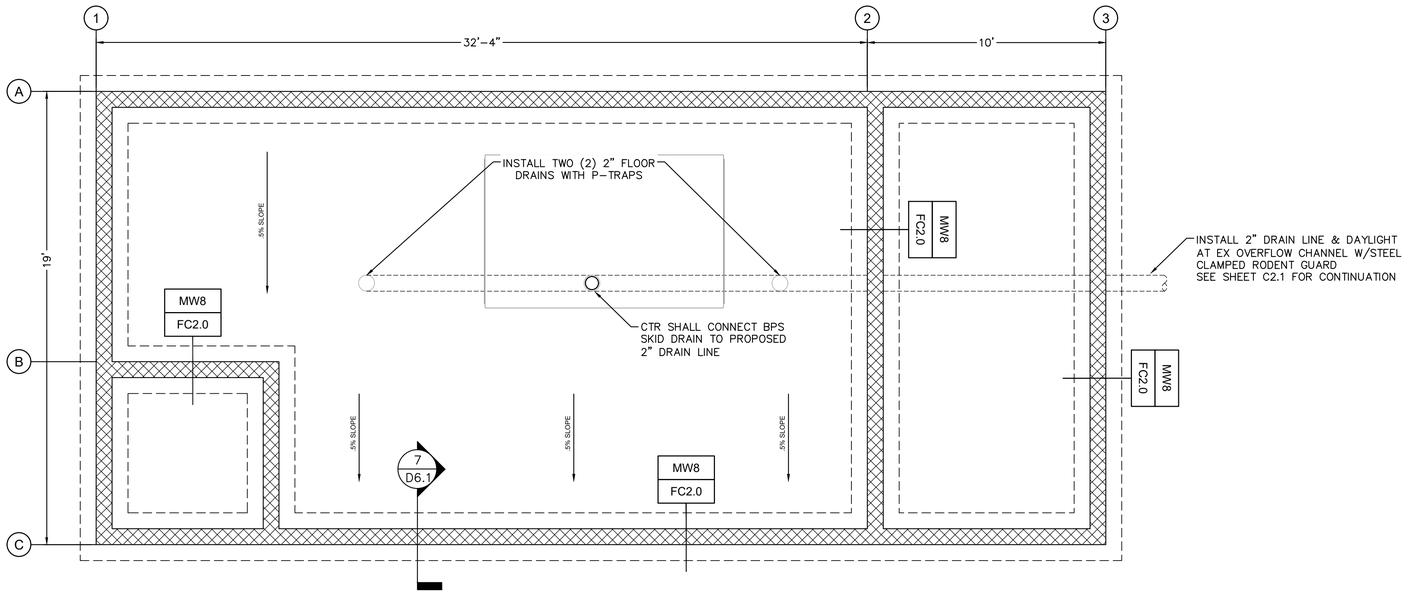

PUMPHOUSE FOUNDATION & FOOTING 1

N.T.S.

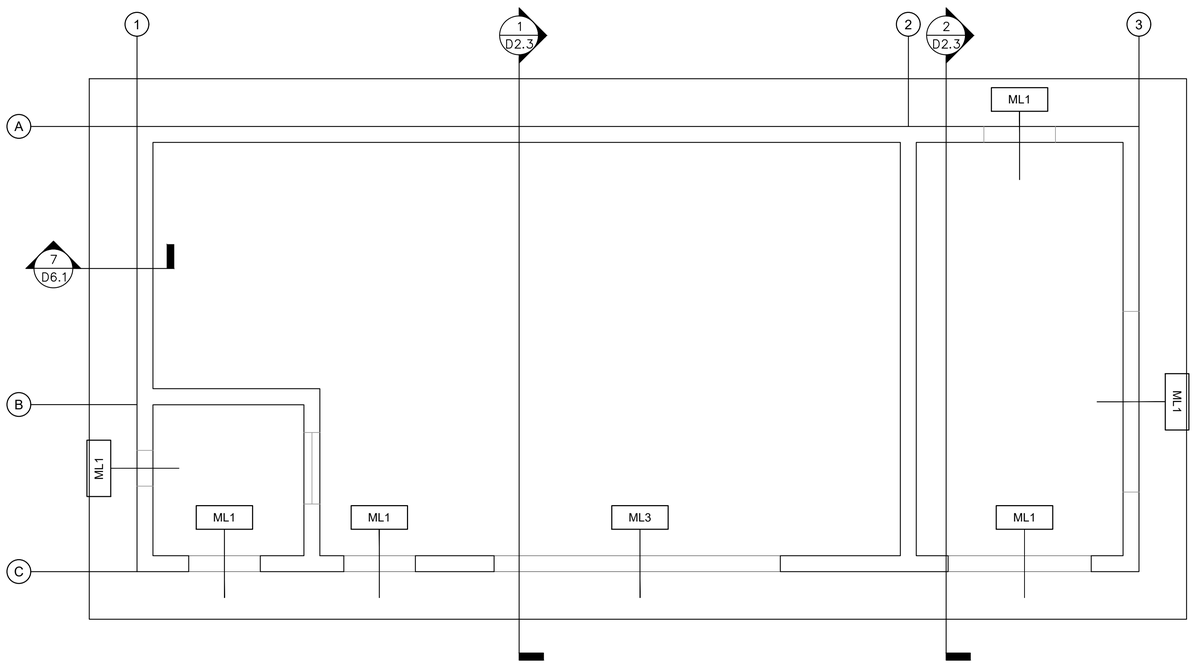

PUMPHOUSE FRAMING PLAN 2

N.T.S.

ENGINEERING
742 D STREET
ELKO, NEVADA 89801
TEL: (775) 738 - 3113
FAX: (775) 738 - 8589
WWW.AMENGINEERING.PRO
• EGINEERING DESIGN & ANALYSIS
• CONSTRUCTION MANAGEMENT
• QA / QC INSPECTIONS
• CONSTRUCTION SURVEYING
• MATERIALS TESTING

PROFESSIONAL ENGINEER
AARON K. MARTINEZ
Exp. 12-31-25
CIVIL
NO. 21636
STATE OF NEVADA
2/7/2024

CITY OF ELKO

ARPA - ELKO MOUNTAIN BOOSTER PUMP & WATERLINE PUMPHOUSE PLAN VIEW

ELKO COUNTY

ELKO NEVADA

REV	DATE	DESCRIPTION	BY

D2

DATE:	FEBRUARY 2024
DRAWN BY:	RSR
DESIGNED BY:	AKM
CHECKED BY:	AKM
JOB NO.:	379.000

P:\379.000 - Elko Mountain Tank Site\Engineering\0-Civil 3D\DWG\379.000 Design.dwg\D2,
02/13/2024 08:56 am rosanna

Masonry Wall Schedule

MW#	Width	Type	Wall Reinforcing Horizontal	Wall Reinforcing Vertical	Comments
MW6	5 5/8"	Type A	#5@48" OC	#5@48" OC	
MW8	7 5/8"	Type A	#5@48" OC	#5@32" OC	Note 7+8
MW8A	7 5/8"	Type A	#5@48" OC	#5@48" OC	Note 8

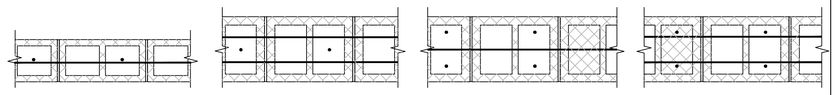

TYPE A
SINGLE VERTICAL +
HORIZONTAL BAR

TYPE B
SINGLE VERTICAL BAR
DOUBLE HORIZONTAL BAR

TYPE C
DOUBLE VERTICAL BAR
SINGLE HORIZONTAL BAR

TYPE D
DOUBLE VERTICAL BAR
DOUBLE HORIZONTAL BAR

NOTES:

1. COORDINATE MASONRY WALL FINISHES, TYPES OF MATERIAL, COURSING, ETC. WITH ARCHITECTURAL DRAWINGS.
2. DO NOT SOLID GROUT WALLS U.N.O.
3. ALL MASONRY BELOW GRADE SHALL BE GROUTED SOLID
4. HORIZONATAL WALL REINFORCING SHALL CONTINUE THROUGH LINTELS. WHERE BOTH HORIZONTAL WALL AND LINTEL REINFORCING OCCOUR IN THE SAME COURSE USE THE LARGER REINFORCING.
5. SEE GENERAL STRUCTURAL NOTES FOR ALL OTHER REQUIREMENTS.
6. ALL HORIZONTAL REINFORCING SHALL TERMINATE AT ENDS OF WALL + ALL JAMBS WITH STANDARD 180° HOOK. PLACE ADDITONAL BAR IN CENTER OF WALL IF NECESSARY. END OF WALL IS DEFINED AS ANY WALL SEGMENT THAT EITHER CHANGES DIRECTION AND/OR CHANGES TO A DIFFERENT WALL TYPE.
7. THIS IS A SHEAR WALL - POVIDE MC2 AT ENDS OF WALL SEGMENT.
8. PROVIDE (2) #5 CONT REINF AT TOP OF WALL.

Masonry Lintel Schedule

ML#	Depth	Width	Type	Lintel Reinforcing Horizontal	Lintel Reinforcing Stirrups	Support Column	Comments
ML1	16"	7 5/8"	Type B	(2)#5T+B	#3@8" OC	MC1	
ML2	24"	7 5/8"	Type B	(2)#5T+B	#3@12" OC	MC2	
ML3	32"	7 5/8"	Type B	(2)#5T+B	#3@9" OC	MC2	

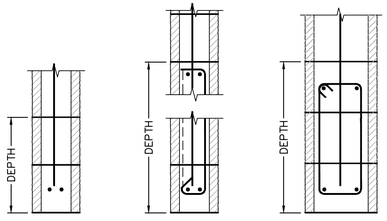

TYPE A TYPE B TYPE C

NOTES:

1.LINTELS SHALL BE OF THE SAME MATERIAL AND WIDTH AS THE WALL IN WHICH THEY ARE CONSTRUCTED.
2.LINTELS SHALL BE GROUTED MONOLITHICALLY WITH THE SUPPORTING WALL AND COLUMNS
3.EXTEND HORIZONATL REINFORCING 48 BAR DIAMETERS (MIN) BEYOND THE EDGE OF ALL OPENINGS, PROVIDE A 90° STANDARD HOOK WHERE THIS CANNOT BE ACCOMPLISHED.
4. SEE GENERAL STRUCTURE NOTES FOR ALL OTHER REQUIREMENTS.

Masonry Column Schedule

MC#	Size	Type	Column Reinforcing Vertical Bars	Column Reinforcing Ties	Comments
MC1	8x8	Type A	(1)#5		
MC2	8x16	Type B	(2)#5		

NOTES:

1. VERTICAL REINFORCING SHALL EXTEND THE FULL WALL HEIGHT, UNO.
2. VERTICAL MASONRY COLUMN REINFORCING SHALL EXTEND INTO THE FOOTING AND TERMINATE WITH STANDARD 90° HOOK. FOR CONCRETE FOUNDATION WALL HEIGHTS OVER 5'-0", VERTICAL MASONRY COLUMN REINFORCING SHALL DOWEL 4"-0" (MIN) INTO FOUNDATION WALL.
3. VERTICAL CONCRETE COLUMN REINFORCING SHALL BE TIED WITH #3 TIES AT THE SAME SPACING AND CONFIGURATIONS AS THE MASONRY COLUMN ABOVE WHEN APPLICABLE.
4. SEE GENERAL STRUCTURAL NOTES FOR ALL OTHER REQUIREMENTS.

TYPE A

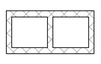

TYPE B

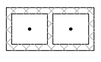

TYPE C

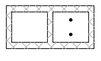

Concrete Footing Schedule

FX#.# Mark	Width	Length	Thick	CROSSWISE REINFORCING NO. BARS	CROSSWISE REINFORCING BAR SIZE	CROSSWISE REINFORCING LENGTH	CROSSWISE REINFORCING SPACING	LENGTHWISE REINFORCING NO. BARS	LENGTHWISE REINFORCING BAR SIZE	LENGTHWISE REINFORCING LENGTH	LENGTHWISE REINFORCING SPACING
FC1.5	1'-6"	CONT	12"					2	#5	CONT	12"
FC2.0	2'-0"	CONT	12"					3	#5	CONT	9"
FS3.0	3'-0"	3'-0"	12"	4	#5	2"-6"	10"	4	#5	2'-6"	10"

NOTES:

1. PLACE ALL FOOTING REINFORCING IN BOTTOM OF FOOTING WITH 3" CLEAR CONCRETE COVER
2. WHERE SPECIFIED, TOP REINFORCING SHALL BE PLACED IN THE TOP OF THE FOOTING WITH 2" CLEAR CONCRETE COVER.
3. CONTINUOUS FOOTINGS SHALL BE CENTERED UNDER WALLS U.N.O.
4. SPOT FOOTINGS SHALL BE CENTERED UNDER COLUMNS, U.N.O.
5. ALL FOOTINGS SHALL BE FORMED AND NOT EARTH FORMED OR OVERSIZED WITHOUT WRITTEN PERMISSION FROM THE STRUCTURAL ENGINEER.
6. REINFORCING IN CONTINIOUS FOOTINGS SHALL PASS THROUGH INTERSECTING SPOT FOOTINGS.
7. SEE GENERAL STRUCTURAL NOTES FOR ALL OTHER REQUIREMENTS.
8. TOP REINFORCING IF NOTED ON SCHEDULE OR SHOWN IN DETAILS SHALL BE #5 @ 12" O.C. UNLESS NOTED OTHERWISE.

Concrete Lap Splice Schedule

BAR SIZE	COMP BARS f'c=ALL	TENSION BARS f'c=3000 PSI REGULAR CLASS A	f'c=3000 PSI REGULAR CLASS B	f'c=3000 PSI TOP CLASS A	f'c=3000 PSI TOP CLASS B	fc=4000 PSI REGULAR CLASS A	fc=4000 PSI REGULAR CLASS B	fc=4000 PSI TOP CLASS A	fc=4000 PSI TOP CLASS B	f'c=5000 PSI REGULAR CLASS A	f'c=5000 PSI REGULAR CLASS B	f'c=5000 PSI TOP CLASS A	f'c=5000 PSI TOP CLASS B	f'c=6000 PSI REGULAR CLASS A	f'c=6000 PSI REGULAR CLASS B	f'c=6000 PSI TOP CLASS A	f'c=6000 PSI TOP CLASS B
#3	12"	17"	22"	22"	28"	15"	19"	19"	25"	13"	17"	17"	22"	12"	16"	16"	20"
#4	22"	22"	29"	29"	38"	19"	25"	25"	33"	17"	23"	23"	29"	16"	21"	21"	27"
#5	19"	28"	36"	36"	47"	24"	31"	31"	41"	22"	28"	28"	36"	20"	26"	26"	33"
#6	23"	33"	43"	43"	56"	29"	37"	37"	49"	26"	34"	34"	44"	24"	31"	31"	40"
#7	27"	48"	63"	63"	81"	42"	54"	54"	71"	38"	49"	49"	63"	34"	45"	45"	58"
#8	30"	55"	72"	72"	93"	48"	62"	62"	81"	43"	56"	56"	72"	39"	51"	51"	66"
#9	34"	62"	81"	81"	105"	54"	70"	70"	91"	48"	63"	63"	81"	44"	57"	57"	74"
#10	39"	79"	91"	91"	118"	61"	79"	79"	102"	54"	71"	71"	92"	50"	64"	64"	84"
#11	43"	78"	101"	101"	131"	67"	87"	87"	114"	60"	78"	78"	102"	55"	71"	71"	93"

NOTES:

1. TOP BARS ARE HORIZONTAL BARS, SPLICED SO THAT 12" OR MORE OF FRESH CONCRETE IS CAST IN THE MEMBER BELOW THE REINFORCING BAR.
2. CLASS A SPLICES MAY BE USED ONLY WHEN 5% OR LESS OF THE BARS ARE SPLICED WITHIN THE LAP SPLICE LENGTH.
3. CLASS B SPLICES SHALL BE USED FOR ALL SPLICES IN BEAMS, SLABS, JOISTS, WALLS, JAMB COLUMNS, AND MOMENT RESISTING FRAMES.

Typical Drill + Epoxy Anchorage Schedule

SIZE (DIA)	EMBEDMENT
#3 (3/8)	4.1/2"
#4 (1/2)	6.1/2"
#5 (5/8)	7.1/2"
#6 (3/4)	10"
#7 (7/8)	12"
#8 (1)	13"
#9 (1.1/18)	14"
#10 (1.1/4)	15"
#11 (1.3/8)	16"

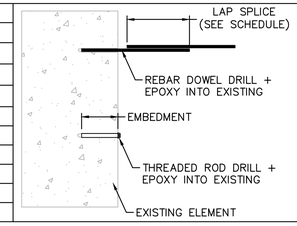

NOTES:

1. PLACE EMBEDED ITEM (REBAR/THREADED ROD) INTO HOLE THAT HAS BEEN PROPERLY PREPARED ACCORDING TO EPOXY MANUFACTURER SPECIFICATIONS AND PROCEDURES. EPOXY IS TO BE SIMPSON 'SET-XP' FOR CONCRETE APPLICATIONS OR ENGINEER APPROVED EQUAL.
2. ALL EPOXY INSTALLATIONS ARE SUBJECT TO CONTINUOUS SPECIAL INSPECTION.
3. SCHEDULED EMBEDMENT ABOVE ARE MINIMUM VALUES, HOWEVER ANY EMBEDMENT LENGHTS SHOWN IN PLANS GOVERN OVER THESE VALUES.

Masonry Lap Splice Schedule

BAR SIZE	f'm=1500 PSI 6" CMU CLASS A	f'm=1500 PSI 8"CMU CLASS A	10"CMU CLASS A	10"CMU CLASS B	12"CMU CLASS A	12"CMU CLASS B	f'm=2500 PSI 6" ATLAS CLASS A	f'm=2500 PSI 8" ATLAS CLASS A	f'm=2500 PSI 8" ATLAS CLASS B	COMMENTS
#3	19"	19"	19"	19"	19"	19"	15"	15"	15"	
#4	25"	25"	30"	25"	28"	25"	28"	20"	20"	24"
#5	39"	31"	49"	31"	45"	31"	45"	31"	24"	40"
#6	81"	57"	XX	53"	92"	53"	92"	64"	45"	87"
#7	-	79"	XX	61"	XX	61"	XX	-	63"	XX
#8	-	XX	XX	87"	XX	75"	XX	-	89"	XX
#9	-	-	-	XX	XX	90"	XX	-	-	-

NOTES:

1. CLASS 'A' SPLICES MAY BE USED WHEN ONLY ONE BAR IS CONTINUOUS IN THE MASONRY CELL OR COURSE.
2. CLASS 'B' SPLICES SHALL BE USED WHEN TWO BARS ARE CONTINUOUS IN THE MASONRY CELL OR COURSE.
3. XX INDICATES THAT A LAP SPLICE IS NOT ALLOWED AND MECHANICAL BAR COUPLERS ARE REQUIRED TO MAKE ANY REINFORCING SPLICE.
4. WHERE VERTICAL BARS HAVE A REQUIRED LAP SPLICE GREATER THAN THE HEIGHT OF THE GROUT POUR, THE BAR SPLICE SHALL BE MADE WITH A MECHANICAL BAR COUPLER. WHERE THE HEIGHT OF THE GROUT POUR EXCEEDS 60", HIGH LIFT GROUTING PROCEDURES SHALL BE FOLLOWED.
5. WHERE MECHANICAL BAR COUPLERS ARE USED THE CONNECTION SHALL DEVELOP 125% OF THE SPECIFIED YIELD STRENGTH OF THE BAR.

AMM ENGINEERING
742 D STREET
ELKO, NEVADA 89801
TEL: (775) 738 - 3113
FAX: (775) 738 - 8189
WWW.AMENGINEERING.PRO
• ENGINEERING DESIGN & ANALYSIS
• CONSTRUCTION MANAGEMENT
• QA / QC INSPECTIONS
• CONTROL SURVEYING
• MATERIALS TESTING

STATE OF NEVADA
AARON K. MARTINEZ
Exp. 12-31-25
CIVIL
No. 21636
2/7/2024

CITY OF ELKO

ARPA - ELKO MOUNTAIN BOOSTER PUMP & WATERLINE STRUCTURAL SCHEDULES

ELKO COUNTY NEVADA

REV	DATE	DESCRIPTION	BY

D2.1

DATE: FEBRUARY 2024
DRAWN BY: RSR
DESIGNED BY: AKM
CHECKED BY: AKM
JOB NO.: 379.000

P:\379.000 - Elko Mountain Tank Site\Engineering\0-Civil 3D\DWG\379.000 Design-Moved.dwg,D2.1,
02/12/2024 05:19 pm rasamna

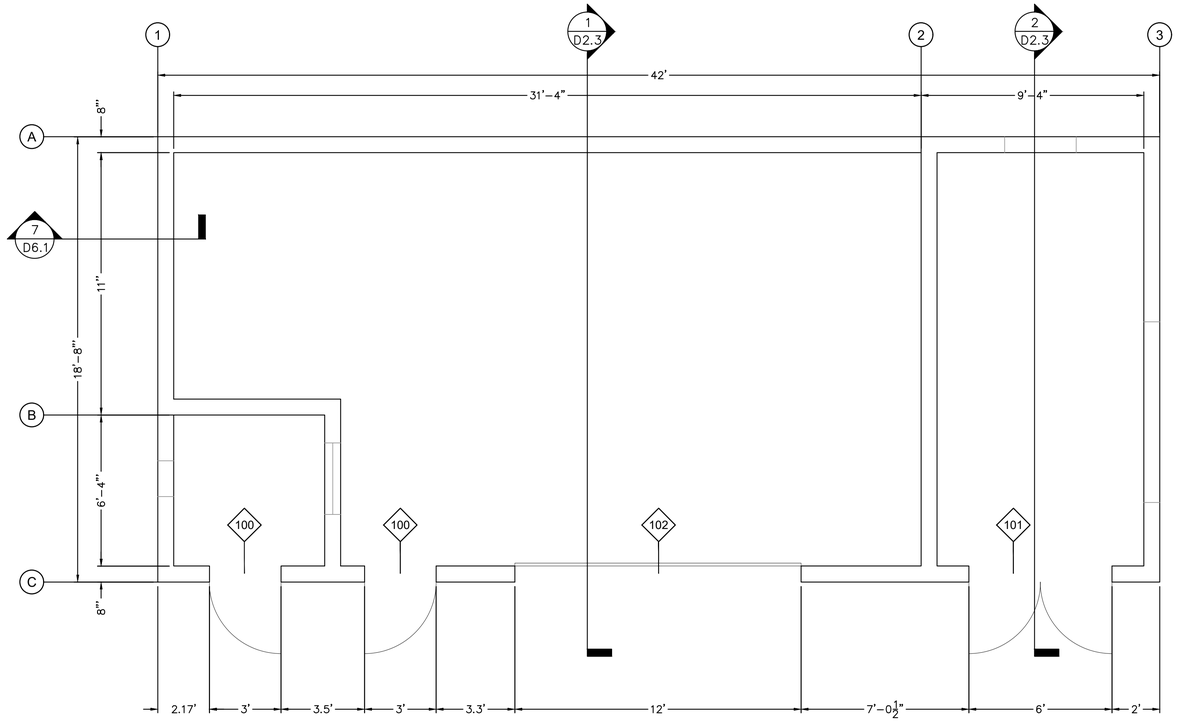

PUMPHOUSE PLAN VIEW (1)
N.T.S.

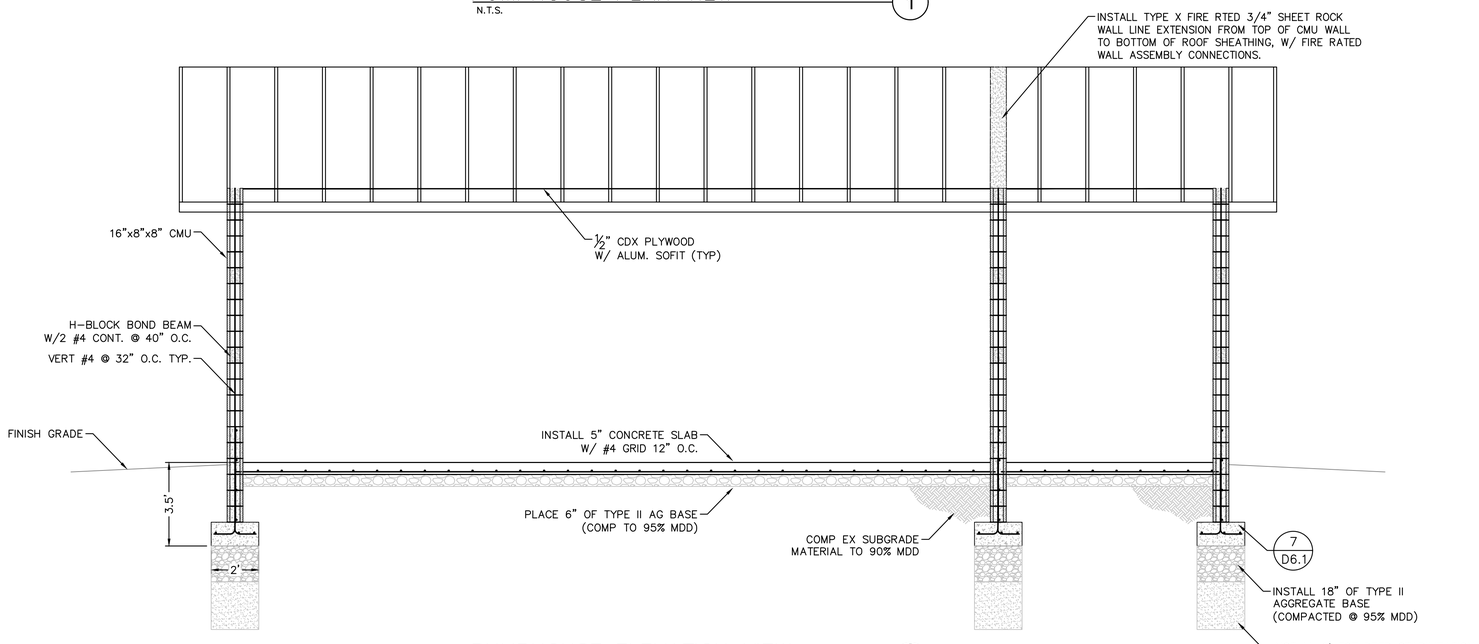

PUMPHOUSE ELEVATION VIEW (2)
N.T.S.

P:\379.000 - Elko Mountain Tank Site\Engineering\0-Civil 3D\DWG\379.000 Design.dwg\D2.2,
02/13/2024 09:37 am rosanna

AM ENGINEERING
742 D STREET
ELKO, NEVADA 89801
TEL: (775) 738 - 3113
FAX: (775) 738 - 8169
WWW.AMENGINEERING.PRO
• ENGINEERING DESIGN & ANALYSIS
• CONSTRUCTION MANAGEMENT
• QA / QC INSPECTIONS
• CONSTRUCTION SURVEYING
• MATERIALS TESTING

PROFESSIONAL ENGINEER
AARON K. MARTINEZ
Exp. 12-31-25
CIVIL
No. 21636
STATE OF NEVADA
2/7/2024

CITY OF ELKO

ARPA - ELKO MOUNTAIN BOOSTER PUMP & WATERLINE PUMPHOUSE PLAN VIEW

ELKO
ELKO COUNTY
NEVADA

REV.	DATE	DESCRIPTION	BY

D2.2

DATE:	FEBRUARY 2024
DRAWN BY:	RSR
DESIGNED BY:	AKM
CHECKED BY:	AKM
JOB NO.:	379.000

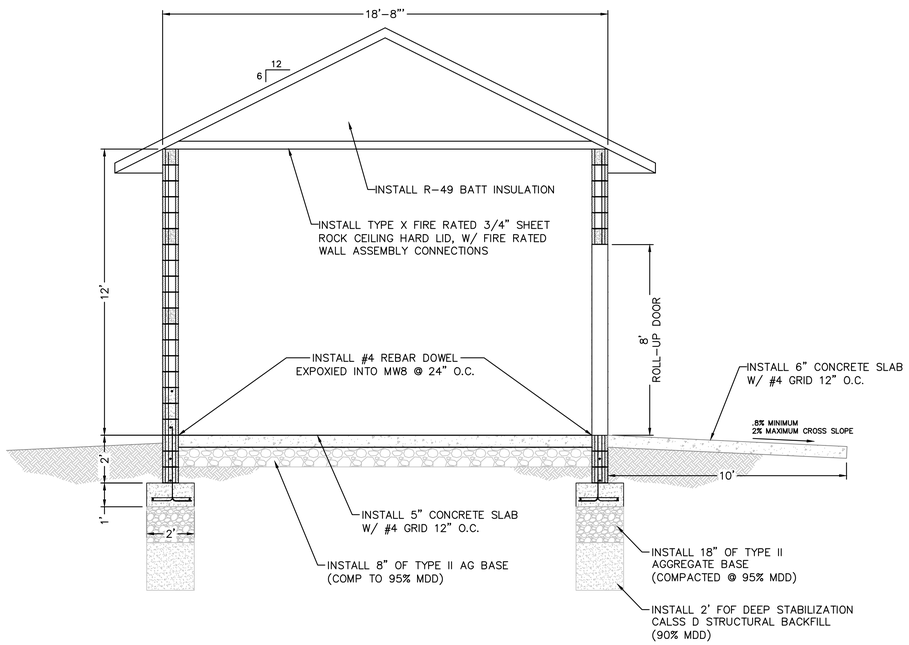

PUMP HOUSE SECTION VIEW (1)
1" = 3'-0"

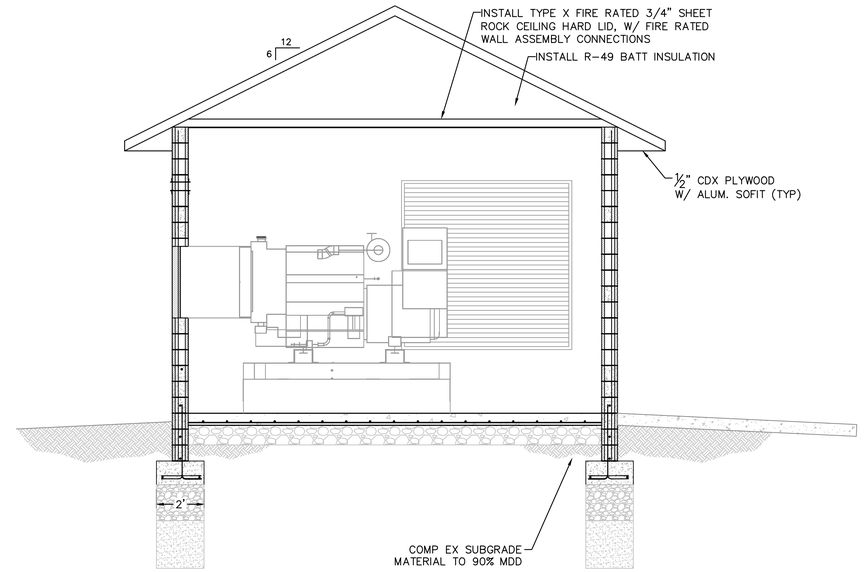

PUMP HOUSE SECTION VIEW (2)
1" = 3'-0"

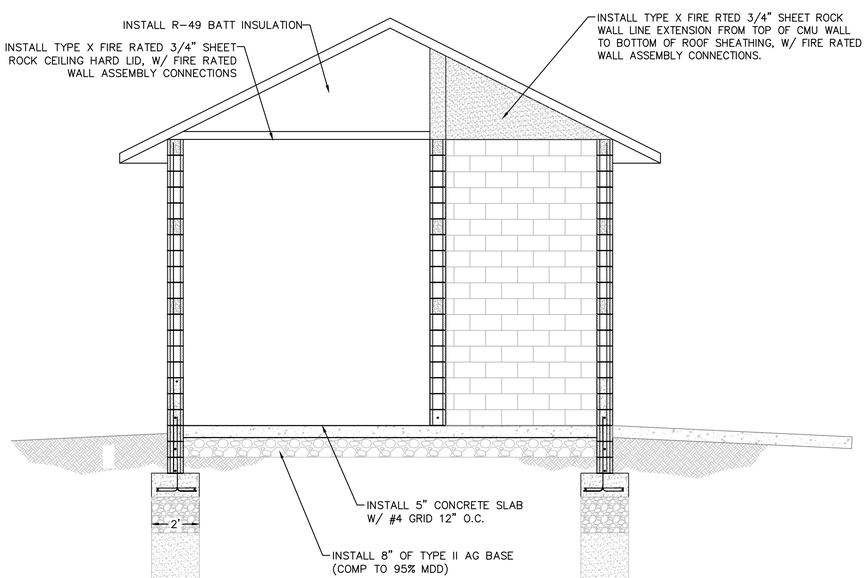

PUMP HOUSE SECTION VIEW (1)
1" = 3'-0"

AMM ENGINEERING
742 D STREET
ELKO, NEVADA 89801
TEL: (775) 738 - 3113
FAX: (775) 324 - 6599
WWW.AMENGINEERING.PRO
• ENGINEERING DESIGN & ANALYSIS
• CONSTRUCTION MANAGEMENT
• QA / QC INSPECTIONS
• CONSTRUCTION SURVEYING
• MATERIALS TESTING

NEVADA REGISTERED PROFESSIONAL ENGINEER
AARON K. MARTINEZ
Exp. 12-31-25
CIVIL
No. 21636
2/7/2024

CITY OF ELKO

ARPA - ELKO MOUNTAIN BOOSTER PUMP & WATERLINE PUMP HOUSE SECTIONS

ELKO COUNTY NEVADA

REV	DATE	DESCRIPTION	BY

D2.3

DATE:	FEBRUARY 2024
DRAWN BY:	RSR
DESIGNED BY:	AKM
CHECKED BY:	AKM
JOB NO.:	379.000

P:\379.000 - Elko Mountain Tank Site\Engineering\0-Civil 3D.DWG\379.000 Design.dwg,D2.3,
02/13/2024 09:31 am rosanna

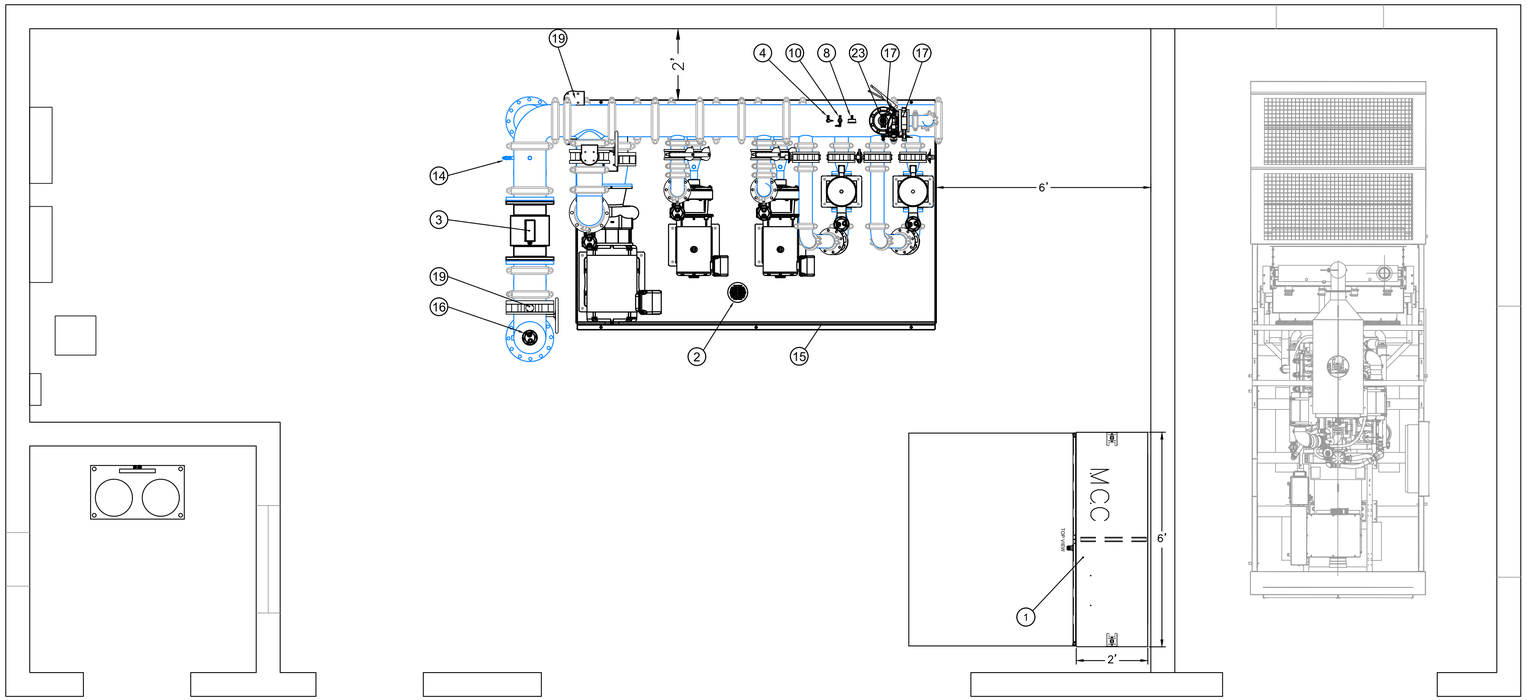

PUMP PLAN VIEW (1)
N.T.S.

DESIGN SPECIFICATIONS							
Design Point 1:	508 GPM @ 156 PSI						
Design Point 2:	1000 GPM @ 156 PSI						
Duty Pump Details:	40 HP/Pump	255 GPM @ 361 TDH					
Hi-Flow Pump Details:	150 HP/Pump	1000 GPM @ 361 TDH					
Jockey Pump Details:	10 HP/Pump	60 GPM @ 361 TDH					
Minimum Power:	480 Volt / 3 Phase						
Model #	CB##C2C040E00508-156XXXB483IAS-10						

ITEM NO.	DESCRIPTION	Size	QTY.
1	CONTROL PANEL	72"x72"x24"	1
2	DRAIN, FLOOR	6"	1
3	FLOW METER, BADGER	10"	1
4	HIGH PRESSURE SWITCH	1/4"	1
5	MOTOR, 3600 RPM, ODP	40 HP	2
6	MOTOR, 3600RPM, ODP	150 HP	1
7	PRESSURE GAUGE, 100PSI	2-1/2"	1
8	PRESSURE GAUGE, 200 PSI	2-1/2"	1
9	PRESSURE SENSOR, -14.5..145PSI, LED DISPLAY, 4-20MA, IFM	1/4"	1
10	PRESSURE SENSOR, -14.5..362.5PSI, LED DISPLAY, 4-20MA, IFM	1/4"	1
11	PUMP, CENTRIFUGAL, CORNELL	1.5YH	2
12	PUMP, CENTRIFUGAL, CORNELL	5YB	1
13	PUMP, VMS		2
14	SAMPLE TAP	1/2"	1
15	SKID, BENT	72"x120"	1
16	VALVE, AIR RELIEF	3/4"	7
17	VALVE, BUTTERFLY, LUG, LEVER, 250 PSI	3"	2
18	VALVE, BUTTERFLY, LUG, LEVER, 250 PSI	4"	8
19	VALVE, BUTTERFLY, LUG, 250 PSI	10"	3
20	VALVE, BUTTERFLY, LUG, 250 PSI	8"	1
21	VALVE, CHECK, SILENT	4"	4
22	VALVE, CHECK, SILENT	8"	1
23	VALVE, PRESSURE RELIEF, ANGLED	3"	1

PPS Precision Pumping Systems
BOOSTER PUMP STATION CONTACT:
MARC SELPH
CH SPENCER, ELKO, NV
(775) 738-4225

NOTE:

1. ALL VALVING, PIPING, AND MECHANICAL JOINTS SHALL BE 300 LB CLASS
2. PUMP SHALL BE INSTALLED IN ACCORDANCE WITH THE MANUFACTURER'S RECOMMENDATIONS. NAC 445A.66995

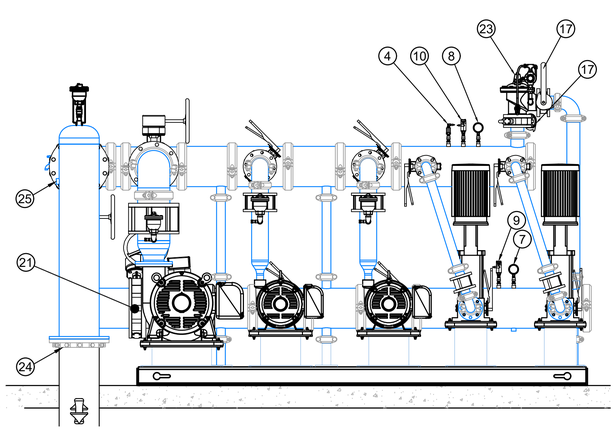

ENLARGED FRONT VIEW (2)
N.T.S.

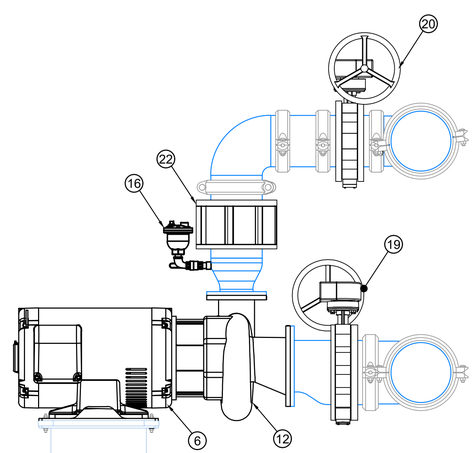

DUTY PUMP (3)
N.T.S.

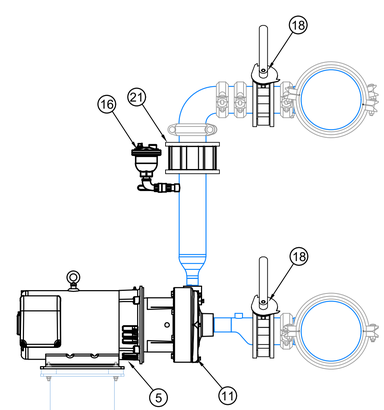

HIGH FLOW PUMP (4)
N.T.S.

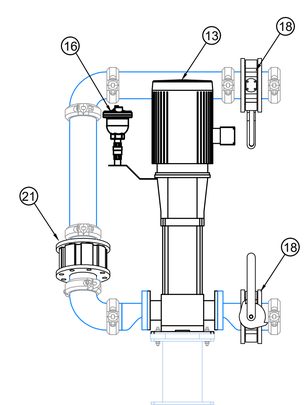

JOCKEY PUMP (5)
N.T.S.

AKM ENGINEERING
742 D STREET
ELKO, NEVADA 89801
TEL: (775) 738 - 3113
FAX: (775) 738 - 8189
WWW.AMENGINEERING.PRO
• ENGINEERING DESIGN & ANALYSIS
• CONSTRUCTION MANAGEMENT
• QA / QC INSPECTIONS
• CONSTRUCTION SURVEYING
• MATERIALS TESTING

AARON K. MARTINEZ
Exp. 12-31-25
CIVIL
No. 21636
2/7/2024

CITY OF ELKO

ARPA - ELKO MOUNTAIN BOOSTER PUMP & WATERLINE
PUMP PLAN VIEW

ELKO COUNTY
ELKO
NEVADA

REV	DATE	DESCRIPTION	BY
1	1/4/24	NDEP REVIEW (EL-00072777-23)D	RSR

D3

DATE:	FEBRUARY 2024
DRAWN BY:	RSR
DESIGNED BY:	AKM
CHECKED BY:	AKM
JOB NO.:	379.000

P:\379.000 - Elko Mountain Tank Site\Engineering\0-Civil 3D\DWG\379.000 Design-Moved.dwg,D3,
02/12/2024 03:37 pm rosanna

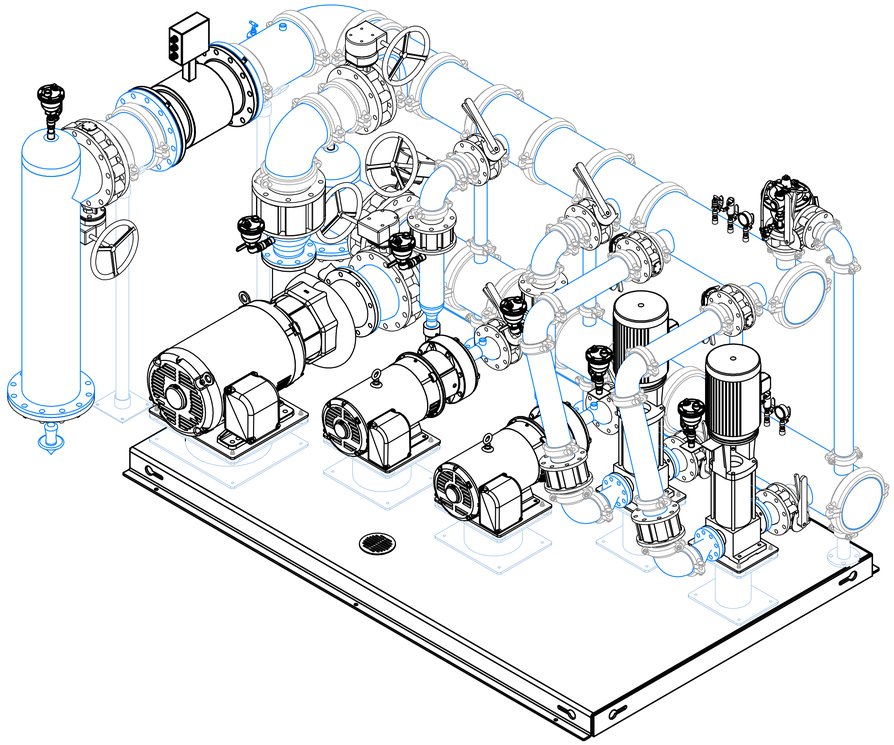

3D VIEW
N.T.S.
1

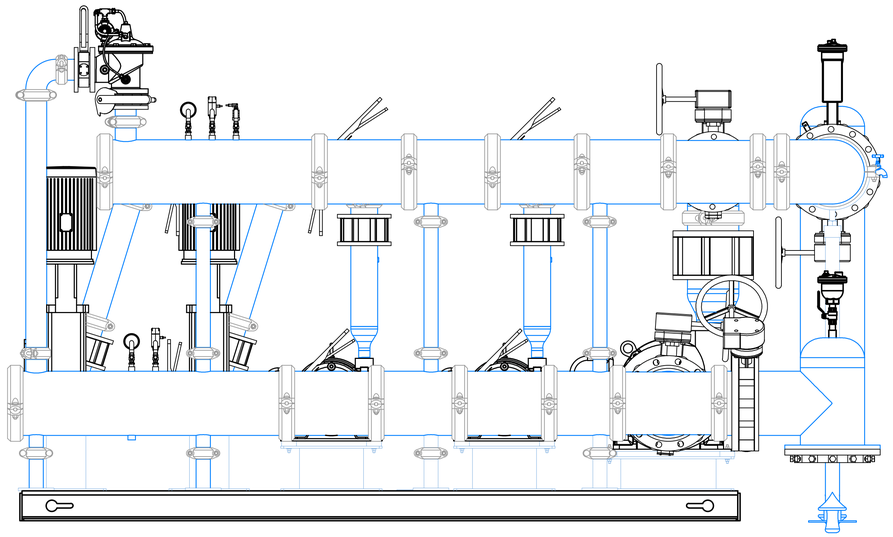

ENLARGED BACK VIEW
N.T.S.
2

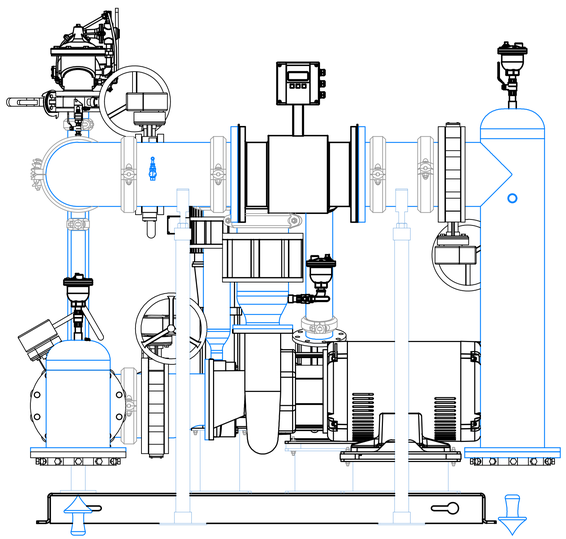

ENLARGED SIDE VIEW
N.T.S.
3

P:\379.000 - Elko Mountain Tank Site\Engineering\0-Civil 3D\DWG\379.000 Design-Moved.dwg,D4,
02/12/2024 03:19 pm rosanna

AMM ENGINEERING
742 D STREET
ELKO, NEVADA 89801
TEL: (775) 738 - 3113
FAX: (775) 738 - 8599
WWW.AMENGINEERING.PRO
• ENGINEERING DESIGN & ANALYSIS
• CONSTRUCTION MANAGEMENT
• QA / QC INSPECTIONS
• CONSTRUCTION SURVEYING
• MATERIALS TESTING

PROFESSIONAL ENGINEER
AARON K. MARTINEZ
Exp. 12-31-25
CIVIL
No. 21636
STATE OF NEVADA
2/7/2024

CITY OF ELKO

ARPA - ELKO MOUNTAIN BOOSTER PUMP & WATERLINE PUMP ELEVATION VIEWS

ELKO COUNTY NEVADA

REV	DATE	DESCRIPTION	BY
1	1/4/24	NDEP REVIEW (EL-0007277-23)D	RSR

D4

DATE:	FEBRUARY 2024
DRAWN BY:	RSR
DESIGNED BY:	AKM
CHECKED BY:	AKM
JOB NO.:	379.000

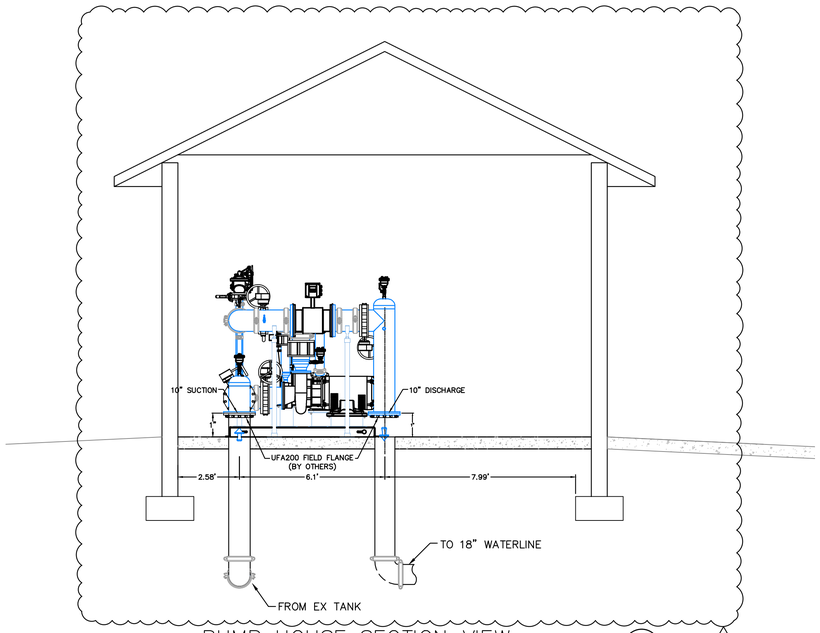

PUMP HOUSE SECTION VIEW 1
1" = 3'-0"

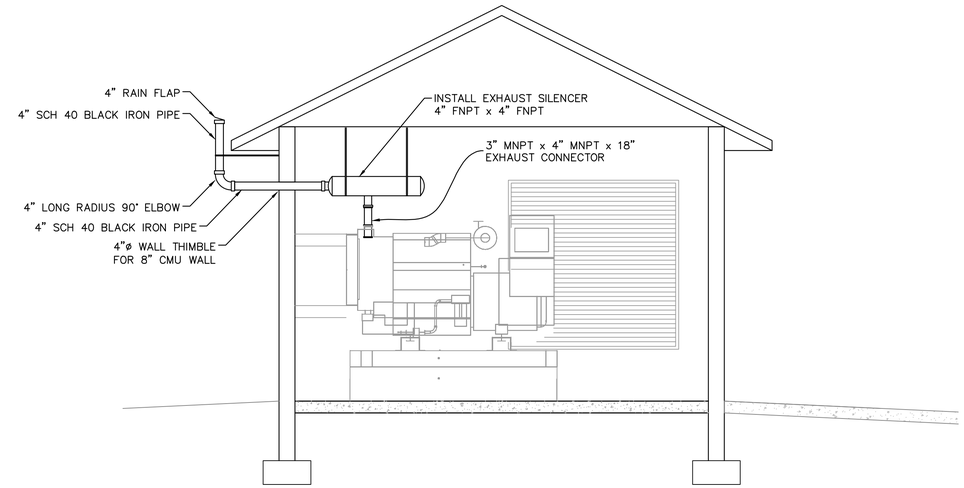

PUMP HOUSE SECTION VIEW 2
1" = 3'-0"

NOTE:

1. ALL VALVING, PIPING, AND MECHANICAL JOINTS SHALL BE 300 LB CLASS.
2. SEE SHEET D3 FOR EQUIPMENT LIST.
3. PUMP TO BE INSTALLED IN ACCORDANCE WITH THE MANUFACTURER'S RECOMMENDATIONS. NAC 445A.66995.
4. ALL DRAINAGE FROM PUMP STUFFING BOXES AND VENT LINES FOR AIR RELEASE VALVES SHALL DISCHARGE IN A COLLECTING PIPE AND ROUTED TO THE DRAINAGE OUTLET. NAC445A.6703.6

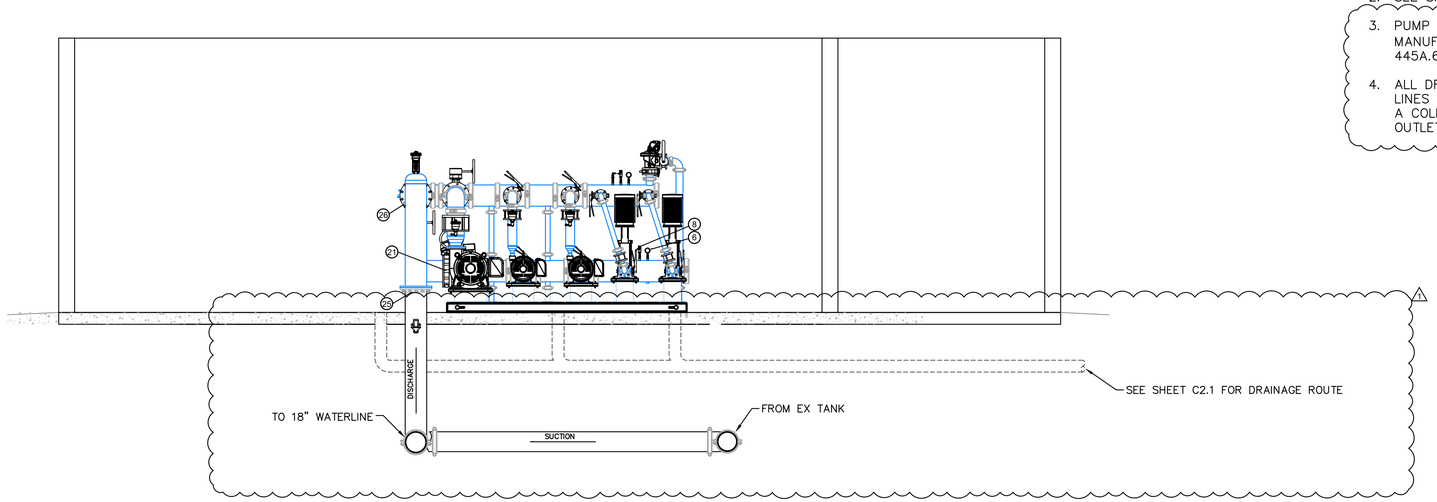

PUMP HOUSE SECTION VIEW 3
1" = 3'-0"

P:\379.000 - Elko Mountain Tank Site\Engineering\0-Civil 3D.DWG\379.000 Design-Moved.dwg,D5,
02/12/2024 02:47 pm rosanna

AMM ENGINEERING
742 D STREET
ELKO, NEVADA 89801
TEL: (775) 738 - 3113
FAX: (775) 324-6599
WWW.AMENGINEERING.PRO
• ENGINEERING DESIGN & ANALYSIS
• CONSTRUCTION MANAGEMENT
• QA / QC INSPECTIONS
• CONSTRUCTION SURVEYING
• MATERIALS TESTING

NEVADA PROFESSIONAL ENGINEER
AARON K. MARTINEZ
Exp. 12-31-25
CIVIL
No. 21636
2/7/2024

CITY OF ELKO

ARPA - ELKO MOUNTAIN BOOSTER PUMP & WATERLINE PUMP HOUSE SECTIONS

ELKO COUNTY NEVADA

REV	DATE	DESCRIPTION	BY
1	1/4/24	NDEP REVIEW (EL-0007277-23)D	RSR

D5

DATE:	FEBRUARY 2024
DRAWN BY:	RSR
DESIGNED BY:	AKM
CHECKED BY:	AKM
JOB NO.:	379.000

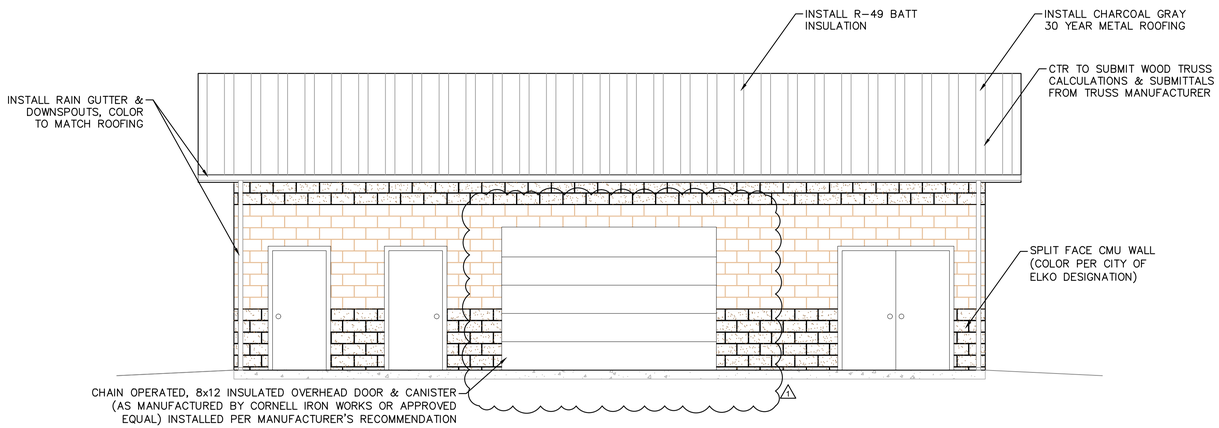

PUMP HOUSE WEST ELEVATION (1)
1" = 4'-0"

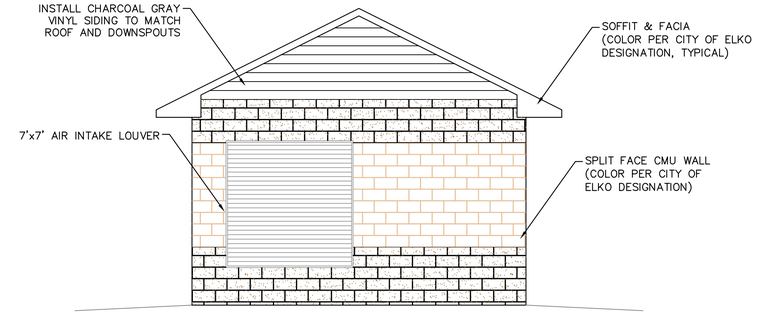

PUMP HOUSE SOUTH ELEVATION (2)
1" = 4'-0"

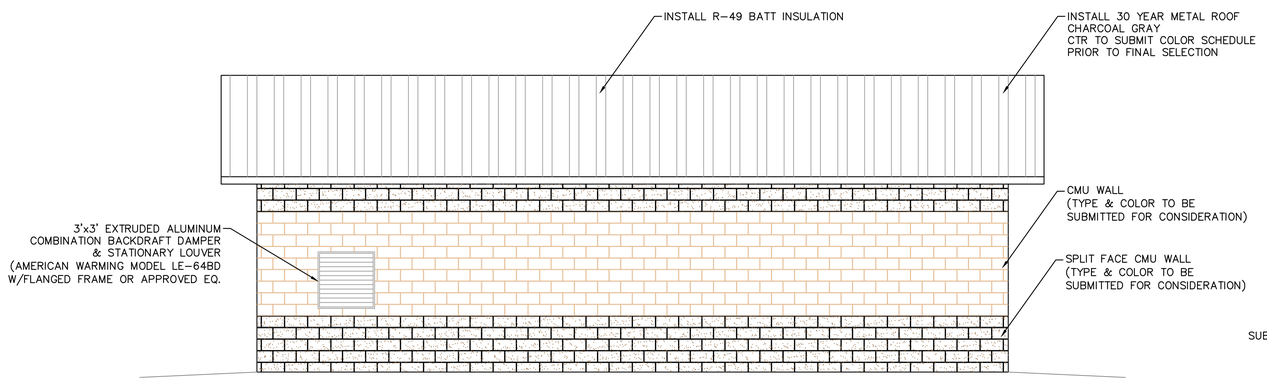

PUMP HOUSE EAST ELEVATION (3)
1" = 4'-0"

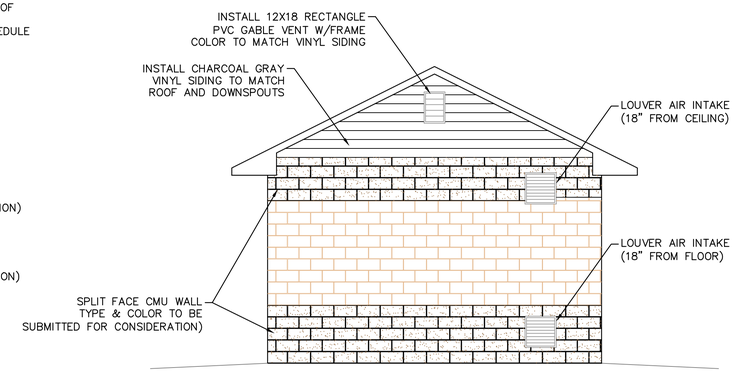

PUMP HOUSE NORTH ELEVATION (4)
1" = 4'-0"

DOOR / HARDWARE SCHEDULE

DOOR NO.	DOOR SIZE WIDTH	DOOR SIZE HEIGHT	DOOR SIZE THICKNESS	DOOR MATERIAL	DOOR TYPE	FRAME WELDED FRAME TYPE	FRAME WELDED FRAME MATERIAL	THRESHOLD	FIRE RATING LABEL	HARDWARE LOCK	HARDWARE HINGE	NOTES
100	3'-0"	7'-0"	1-3/4"	HM	A	Single	GS	SADDLE	*	CYLINDRICAL	SPRING	
101	6'-0"	7'-0"	1-3/4"	HM	B	Double	GS	SADDLE	*	CYLINDRICAL	SPRING	
102	12'-0"	8'-0"			C	Roll-up	Steel		*			CORNELL ESD10

ALL DOORS AND HARDWARE AS SPECIFIED OR APPROVED EQUAL

P:\379.000 - Elko Mountain Tank Site\Engineering\0-Civil 3D.DWG\379.000 Design-Moved.dwg,D6,
02/12/2024 05:28 pm rosanna

AMM ENGINEERING
742 D STREET
ELKO, NEVADA 89801
TEL: (775) 738 - 3113
FAX: (775) 738 - 8598
WWW.AMENGINEERING.PRO
• ENGINEERING DESIGN & ANALYSIS
• CONSTRUCTION MANAGEMENT
• QA / QC INSPECTIONS
• CONSTRUCTION SURVEYING
• MATERIALS TESTING

PROFESSIONAL ENGINEER
AARON K. MARTINEZ
Exp. 12-31-25
CIVIL
No. 21636
STATE OF NEVADA
2/7/2024

CITY OF ELKO

ARPA - ELKO MOUNTAIN BOOSTER PUMP & WATERLINE
PUMP HOUSE ELEVATIONS

ELKO COUNTY
ELKO NEVADA

REV	DATE	DESCRIPTION	BY
1	1/4/24	NDEP REVIEW (EL-0007277-23)D	RSR

D6

DATE: FEBRUARY 2024
DRAWN BY: RSR
DESIGNED BY: AKM
CHECKED BY: AKM
JOB NO.: 379.000

SEE SHEET D6.2 FOR OVERHEAD DOOR DETAILS

OVERHEAD DOOR (1)
N.T.S.

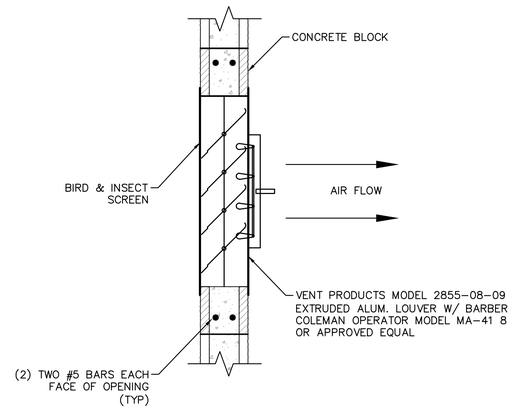

LOUVER DETAIL (2)
N.T.S.

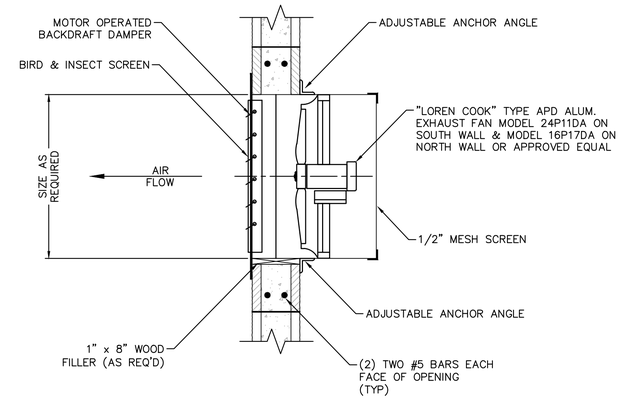

EXHAUST FAN DETAIL (3)
N.T.S.

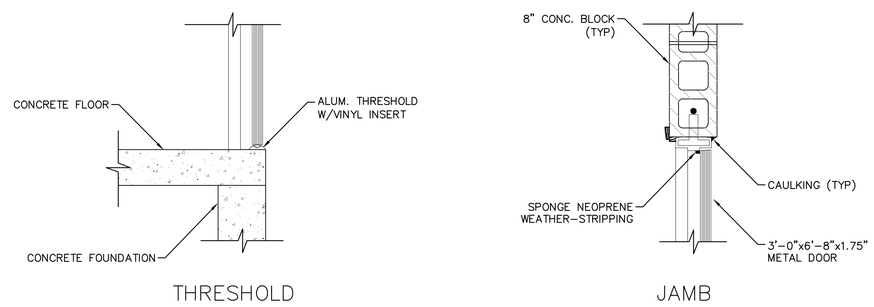

METAL DOOR DETAIL (4)
N.T.S.

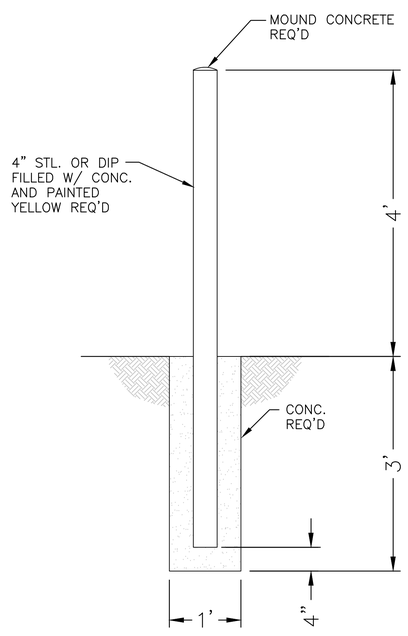

BOLLARD DETAIL (5)
N.T.S.

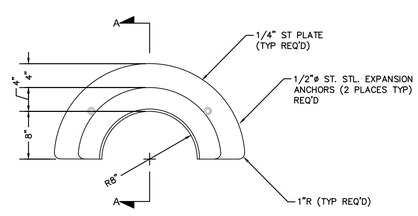

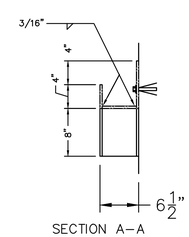

NOTE:

1. HOT DIP GALV. ENTIRE HOSE RACK AFTER FABRICATION
2. (1) ONE AT EVERY HOSE BIB REQUIRED

HOSE RACK DETAIL (6)
N.T.S

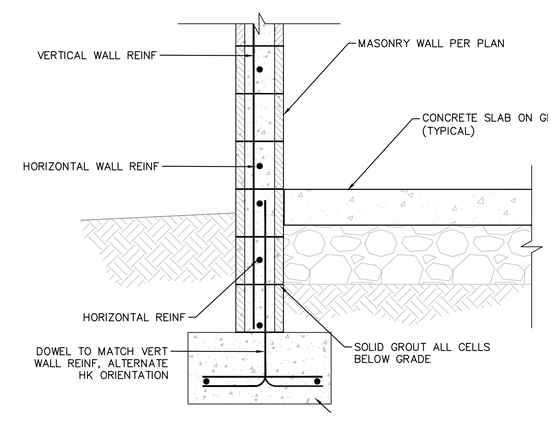

PERIMETER MASONRY WALL ON FOOTING (TYPICAL) (7)
N.T.S.

AKM ENGINEERING
742 D STREET
ELKO, NEVADA 89801
TEL: (775) 738 - 3113
FAX: (775) 738 - 8598
WWW.AMENGINEERING.PRO
• ENGINEERING DESIGN & ANALYSIS
• CONSTRUCTION MANAGEMENT
• QA / QC INSPECTIONS
• CONSTRUCTION SURVEYING
• MATERIALS TESTING

NEVADA PROFESSIONAL ENGINEER
AARON K. MARTINEZ
Exp. 12-31-25
CIVIL
No. 21636
2/7/2024

CITY OF ELKO

ARPA - ELKO MOUNTAIN BOOSTER PUMP & WATERLINE PUMP HOUSE DETAILS

ELKO COUNTY NEVADA

ELKO

REV	DATE	DESCRIPTION	BY

D6.1

DATE:	FEBRUARY
DRAWN BY:	RSR
DESIGNED BY:	AKM
CHECKED BY:	AKM
JOB NO.:	379.000

P:\379.000 - Elko Mountain Tank Site\Engineering\D-Civil 3D\DWG\379.000 Design-Moved.dwg,D6.1,
02/12/2024 11:36 am rosanna

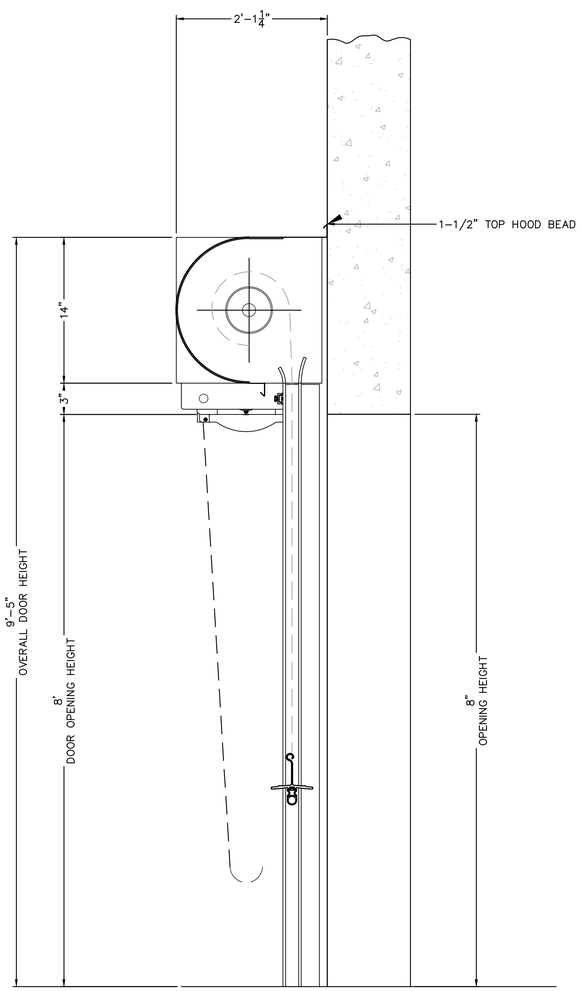

A-A SECTION VIEW

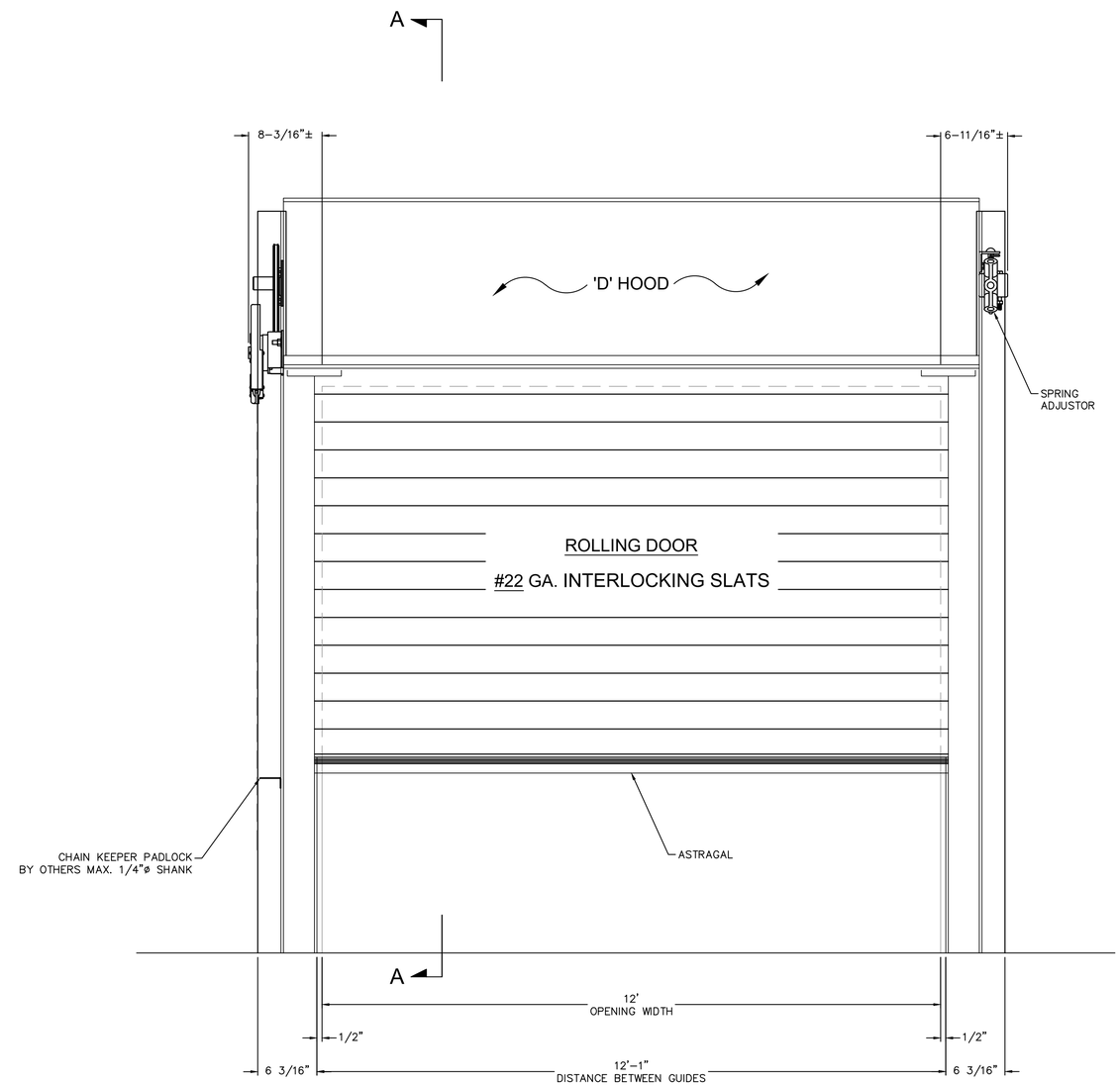

ELEVATION VIEW (COIL SIDE) 1

N.T.S.

NOTES:

1. SUPPORT TO RUN TO TOP OF COIL

2. MATERIAL & FINISH
   - CURTAIN – GALVANIZED STEEL WITH GALVANEX™ COATING SYSTEM FINISH COLOR – GRAY
   - BOTTOM BAR – ALUMINUM, MILL FINISH
   - GUIDES – STRUCTURAL STEEL, GRAY POLYESTER POWDER COATING
   - HOOD – GALVANIZED STEEL WITH GALVANEX™ COATING SYSTEM FINISH COLOR – GRAY
   - PLAIN STEEL – POWDER COATED GRAY

P:\379.000 - Elko Mountain Tank Site\Engineering\D-Civil 3D\DWG\379.000 Design-Moved.dwg,D6.2,
02/12/2024 11:40 am rosanna

ENGINEERING
742 D STREET
ELKO, NEVADA 89801
TEL: (775) 738 - 3113
FAX: (775) 738 - 8598
WWW.AMENGINEERING.PRO
• ENGINEERING DESIGN & ANALYSIS
• CONSTRUCTION MANAGEMENT
• QA / QC INSPECTIONS
• CONSTRUCTION SURVEYING
• MATERIALS TESTING

AARON K. MARTINEZ
Exp. 12-31-25
CIVIL
No. 21636
2/7/2024

CITY OF ELKO

ARPA - ELKO MOUNTAIN BOOSTER PUMP & WATERLINE PUMP HOUSE DETAILS

ELKO COUNTY

ELKO

NEVADA

REV	DATE	DESCRIPTION	BY

D6.2

DATE:	FEBRUARY 2024
DRAWN BY:	RSR
DESIGNED BY:	AKM
CHECKED BY:	AKM
JOB NO.:	379.000

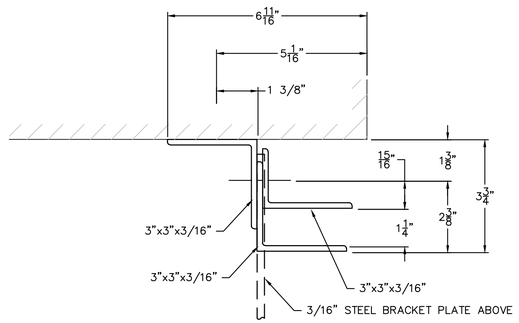

GA0411 – 3 3/4"

WALL FASTENERS:
AT 16" ON CENTER
– Ø3/8" x 3–3/4" ITW REDHEAD TRUBOLT,
MIN. 3000 PSI CONCRETE REQ'D
MIN. EMBEDMENT DEPTH – 2–1/4"

ASSEMBLY FASTENERS:
AT 36" ON CENTER
– Ø3/8–16 x 1–1/2"
– HEX HEAD NUT, GR. 5
– HARDENED FLAT WASHERS
– HEX HEAD CAP SCREW, GR. 5

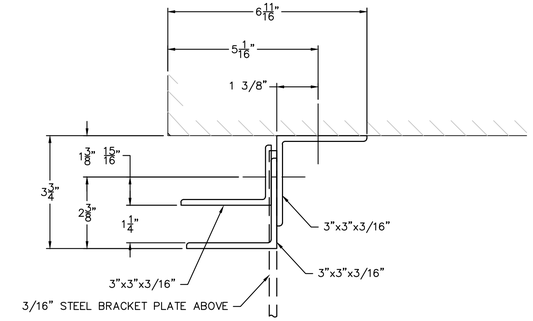

GA0411 – 3 3/4"

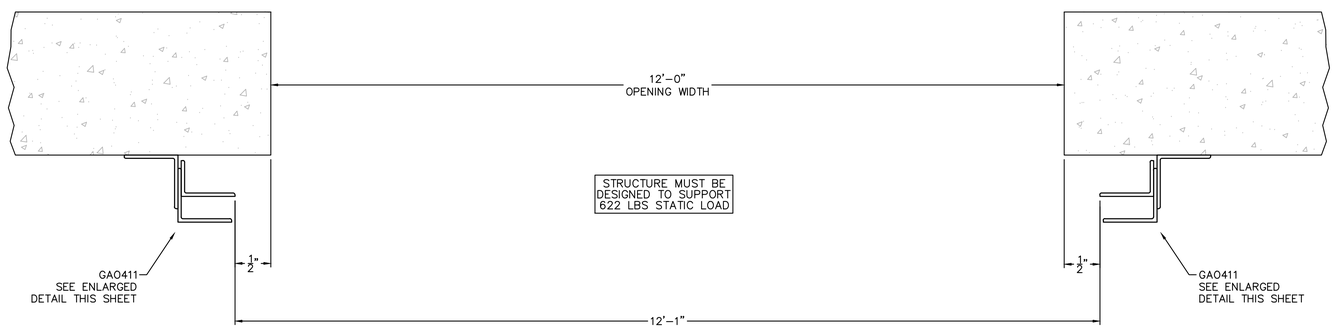

PLAN OF OPENING
N.T.S.
1

INSTALLERS NOTES:

MAINTAINING FACTORY SET GUIDE GAPS IS CRITICAL TO THE PROPER OPERATION OF THE DOOR AND IT'S ABILITY TO WITHSTAND THE DESIGNED WINDLOAD.

NOTE:

WALL CONSTRUCTION DETAIL SHOWN IS FOR ILLUSTRATIVE PURPOSES ONLY, DOES NOT IMPLY COMPLIANCE WITH BUILDING REQUIREMENTS, AND MUST MEET ARCHITECTURAL SPECIFICATIONS TO PROPERLY SUPPORT PRODUCT. PRODUCTS DESIGNED WITH WIND LOAD REQUIREMENTS MUST BE PROPERLY FASTENED TO STRUCTURAL MEMBERS AS SPECIFIED IN ORDER TO AVOID CATASTROPHIC FAILURE. WALL CONSTRUCTION AND CLOSURE INSTALLATION SHALL BE IN ACCORDANCE WITH THE LOCAL AUTHORITY HAVING JURISDICTION REQUIREMENTS.

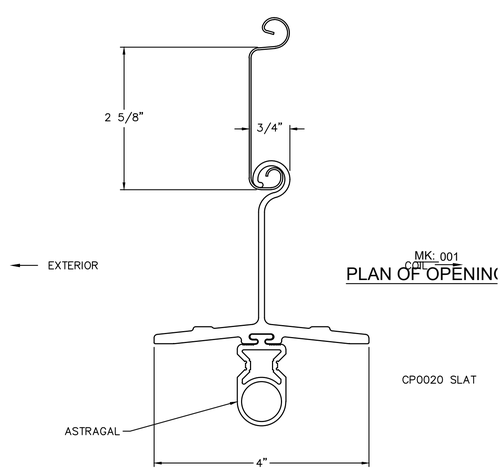

BOTTOM BAR/SLAT DETAIL
N.T.S.
2

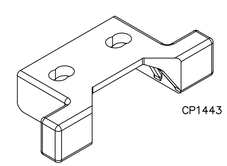

CP1443 MOLDED NYLON ENDLOCK ON ALTERNATING SLATS WITH 2 x 1/4" RIVETS

ENDLOCK DETAIL (CP1443)
N.T.S.
3

AKM ENGINEERING
742 D STREET
ELKO, NEVADA 89801
TEL: (775) 738 - 3113
FAX: (775) 738 - 8598
WWW.AMENGINEERING.PRO
• ENGINEERING DESIGN & ANALYSIS
• CONSTRUCTION MANAGEMENT
• QA / QC INSPECTIONS
• CONSTRUCTION SURVEYING
• MATERIALS TESTING

PROFESSIONAL ENGINEER
AARON K. MARTINEZ
Exp. 12-31-25
CIVIL
No. 21636
STATE OF NEVADA
2/7/2024

CITY OF ELKO

ARPA - ELKO MOUNTAIN BOOSTER PUMP & WATERLINE PUMP HOUSE DETAILS

ELKO COUNTY

ELKO

NEVADA

REV	DATE	DESCRIPTION	BY

D6.2

DATE:	FEBRUARY 2024
DRAWN BY:	RSR
DESIGNED BY:	AKM
CHECKED BY:	AKM
JOB NO.:	379.000

P:\379.000 – Elko Mountain Tank Site\Engineering\D–Civil 3D\DWG\379.000 Design–Moved.dwg,D6.3,
02/12/2024 11:48 am rosanna

DRAWING SCHEDULE

SHEET	DESCRIPTION	
E0.1	ELECTRICAL LEGEND AND DRAWING SCHEDULE	●
E0.2	ELECTRICAL SPECIFICATIONS	●
E0.3	ONELINE DIAGRAM AND PANEL SCHEDULES	●
E0.4	LIGHTING FIXTURE SCHEDULE AND IECC	●
E0.5	DETAILS	●
E0.6	DETAILS	●
E1.1	ELECTRICAL SITE PLAN	●
E2.1	LIGHTING AND POWER PLANS	●
E2.2	GROUNDING PLAN	●
	TOTAL SHEETS IN ISSUE:	9

ELECTRICAL LEGEND

- PANELBOARD: SURFACE MOUNTED
- PANELBOARD: FLUSH MOUNTED
- SWITCHBOARD OR DISTRIBUTION PANEL
- XF TRANSFORMER
- PULLBOX / VAULT
- MOTOR STARTER
- COMBINATION MOTOR STARTER
- COMBINATION MOTOR STARTER PROVIDED BY OTHERS (COORDINATE WITHSTAND RATINGS WITH EQUIP SUPPLIER)
- F DISCONNECT SWITCH - FUSIBLE (FUSED PER EQUIP. NAMEPLATE)
- N DISCONNECT SWITCH - NON-FUSIBLE
- DISCONNECT SWITCH PROVIDED BY OTHERS (COORDINATE WITHSTAND RATINGS WITH EQUIP SUPPLIER)
- VARIABLE FREQUENCY DRIVE
- VARIABLE FREQUENCY DRIVE PROVIDED BY OTHERS (COORDINATE WITHSTAND RATINGS WITH EQUIP SUPPLIER)
- CB ENCLOSED CIRCUIT BREAKER
- GROUND ROD
- SHUNT TRIP STATION OR EMERGENCY PUSHBUTTON
- M REMOTE METER

- S SINGLE POLE SWITCH 48" AFF
- S_3 THREE WAY SWITCH 48" AFF
- S_4 FOUR WAY SWITCH 48" AFF
- S_K KEY OPERATED SWITCH 48"
- S_L SWITCH WITH LIGHTED HANDLE
- S_M MANUAL MOTOR STARTER
- S_P SWITCH WITH PILOT LIGHT 48" AFF
- S_T TIME WALL SWITCH EQUAL TO HUBBELL DT2000W 48" AFF
- D DIMMER OPERATED SWITCH 48" AFF
- OCCUPANCY SENSOR - WALL MOUNTED 48" AFF
- ^{D} 0-10V DIMMING OCCUPANCY SENSOR - WALL MOUNTED 48" AFF - EQUAL TO SENSOR SWITCH WSX-D
- OS OCCUPANCY SENSOR - CEILING MOUNTED. PROVIDE WITH POWER PACK PER MFG REQUIREMENTS.
- OS OCCUPANCY SENSOR - CORNER MOUNTED. PROVIDE WITH POWER PACK PER MFG REQUIREMENTS.
- CONTROL STATION
- CONTACTOR OR RELAY
- PC PHOTOELECTRIC CELL (ON ROOF FACING NORTH UNO)
- TC TIMECLOCK

- CONDUIT/RACEWAY IN WALL OR ABOVE CEILING
- CONDUIT/RACEWAY BELOW GRADE OR BELOW FLOOR
- BREAK OR RUN CONTINUES
- —OH— OVERHEAD SERVICE
- — P — PRIMARY
- — S — SECONDARY
- — C — COMMUNICATIONS OR SIGNAL
- — T — TELEPHONE
- —TV— TELEVISION
- — • — LOW VOLTAGE AND/OR CONTROL WIRING
- -✳-✳- EMERGENCY CIRCUIT
- CONDUIT/RACEWAY STUB OUT: MARK AND CAP (SITE)
- CONDUIT/RACEWAY SLEEVE

E = EQUIPMENT
H = ELECTRIC HEAT
K = KITCHEN EQUIP
L = LIGHTING
M = MOTOR
MI = LARGEST MOTOR
R = RECEPTACLES

- SINGLE RECEPTACLE: 20A, 125V, NEMA 5-20, +18" AFF
- DUPLEX RECEPTACLE: 20A, 125V, NEMA 5-20, +18" AFF
- DUPLEX RECEPTACLE: HALF SWITCHED, +18" AFF
- DUPLEX RECEPTACLE GFI TYPE - 20A, 125V, NEMA 5-20 GFI +18" AFF
- QUAD RECEPTACLE: 20A, 125V, NEMA 5-20, +18" AFF
- ISOLATED GROUND TYPE RECEPTACLE (ORANGE TRIANGLE), 20A, 125V, NEMA 5-20IG, +18" AFF
- COMBO DUAL USB CHARGER / DUPLEX RECEPTACLE, 5.1A, (1) TYPE A & (1) TYPE C USB (3.1, 3.0, 2.0 AND 1.1 COMPATIBLE), 20A, 125V, NEMA 5-20R, +18AFF
- QUAD USB CHARGER, 5.1A, (2) TYPE A & (2) TYPE C USB (3.1, 3.0, 2.0 AND 1.1 COMPATIBLE), +18AFF
- SPECIAL PURPOSE RECEPTACLE: SEE DWGS FOR NEMA CONFIGURATION
- DUPLEX RECEPTACLE: FLOOR MOUNTED
- QUAD RECEPTACLE: FLOOR MOUNTED
- DUPLEX RECEPTACLE: CEILING MOUNTED
- QUAD RECEPTACLE: CEILING MOUNTED
- BLANK GFCI PROTECTIVE DEVICE IN READILY ACCESSIBLE LOCATION (LABEL PROTECTED DEVICES)
- DUPLEX "CLOCK" RECEPTACLE: 125V, NEMA 5-20R, +60" AFF
- X" DEVICE MOUNTED AT NON-STANDARD HEIGHT. IF NO HEIGHT SHOWN VERIFY HEIGHT WITH ARCHITECT
- MULTI-OUTLET ASSEMBLY: SPACING PER DWGS

- DATA / VOICE OUTLET: 18" AFF - 1 VOICE, 1 DATA JACK, 2 BLANKS
- DATA / VOICE OUTLET: FLOOR MOUNTED
- MULTI-OUTLET ASSEMBLY: SPACING PER DWGS
- TELEPHONE OUTLET: 18" AFF
- DATA OUTLET: 18" AFF
- DEVICE MOUNTED AT NON-STANDARD HEIGHT. IF NO HEIGHT SHOWN VERIFY HEIGHT WITH ARCHITECT
- S SPEAKER
- TV TELEVISION OUTLET: 18" AFF (UNO)
- TELEPHONE TERMINAL BOARD (TTB)
- VC VOLUME CONTROL
- GROUNDING BAR

* FIXTURE SCHEDULE HAS PRECEDENCE *

- LENSED TROFFER
- VOLUMETRIC TROFFER
- FLANGED TROFFER
- SURFACE MOUNT TROFFER
- STRIP FIXTURE
- DOWNLIGHT
- WALL PACK
- POLE MOUNT
- EMERGENCY LIGHTING UNIT
- EXIT SIGN FIXTURE - SHADED AREA DENOTES LIGHTED FACE - ARROWS INDICATE DIRECTION
- SHADING INDICATES EGRESS FIXTURE

- T THERMOSTAT (PROVIDED BY MECH. CONTRACTOR UNO)
- J JUNCTION BOX (SIZE AS REQUIRED UNO)
- 3 SHEET NOTE DESIGNATION
- FI FIXTURE DESIGNATION: FI=TYPE (SEE FIXTURE SCH.)
- 3 REVISION DELTA: NUMBER REPRESENTS REVISION
- 1253 FEEDER DESIGNATION
- AHU 2 EQUIPMENT CONNECTION

- GFI GROUND FAULT INTERRUPTER DEVICE
- M METERING DEVICE
- M REMOTE METER
- ST SHUNT TRIP DEVICE
- TRANSFORMER
- CURRENT TRANSFORMER
- G GENERATOR
- # MOTOR - # INDICATES HP
- INTERRUPTER SWITCH
- GFI GROUND FAULT RELAY W/ CT OR SENSOR
- FUSE
- CIRCUIT BREAKER
- DRAWOUT CIRCUIT BREAKER
- A/B TRANSFER SWITCH (A=AUTOMATIC, M=MANUAL) # FOR POLES 2, 3 OR 4
- SPD SURGE PROTECTION DEVICE

- NORMALLY OPEN (NO) CONTACT
- NORMALLY CLOSED (NC) CONTACT
- C COIL - VOLTAGE PER CONTROL DIAGRAMS
- R PILOT LIGHT (LED) PUSH-TO-TEST. LETTER INDICATES COLOR (R=RED, G=GREEN, A=AMBER, Y=YELLOW)
- R PILOT LIGHT (LED) NON PUSH-TO-TEST
- THERMAL OVERLOAD
- MAGNETIC OVERLOAD
- PUSH BUTTON NORMALLY OPEN (NO)
- PUSH BUTTON NORMALLY CLOSED (NC)
- O H A HAND-OFF-AUTO (HOA) SELECTOR SWITCH
- LIMIT SWITCH NORMALLY OPEN (NO)
- LIMIT SWITCH NORMALLY CLOSED (NC)
- R PUSH BUTTON ILLUMINATED (LED)

TICS = NO. OF #12 WIRES (UNO) IF MORE THAN TWO WITHIN RACEWAY. GROUNDING CONDUCTOR (NOT SHOWN) ALWAYS REQUIRED.
- ISOLATED GROUNDING CONDUCTOR
- NEUTRAL CONDUCTOR
- PHASE CONDUCTOR(S)

BRANCH CIRCUIT (WHEN TIC MARKS ARE NOT SHOWN) = (1) PHASE, (1) NEUTRAL AND (1) GROUNDING CONDUCTOR

HOMERUN TO PANELBOARD OR DEVICE

HA-(1,3,5,3N)G HOMERUN CIRCUIT DESIGNATION
- GROUNDING CONDUCTOR
- NEUTRAL CONDUCTOR (N=1, 2N=2 NEUTRALS, 3N=3 NEUTRALS)
- PHASE CONDUCTOR(S)
- PANELBOARD DESIGNATION

HA-(1,3,5)G HOMERUN CIRCUIT DESIGNATION (3 PHASE CIRCUIT SHOWN)
- GROUNDING CONDUCTOR
- PHASE CONDUCTOR(S)
- PANELBOARD DESIGNATION

NOTE: "(E)" IN HOMERUN INDICATES NEW HOMERUN TO EXISTING PANEL

A	AMPS
ADA	AMERICANS WITH DISABILITIES ACT
AFC	ABOVE FINISHED CEILING
AFCI	ARC-FAULT CIRCUIT INTERRUPTER
AFF	ABOVE FINISHED FLOOR
AFG	ABOVE FINISHED GRADE
AHJ	AUTHORITY HAVING JURISDICTION
AIC	AMP INTERRUPTING CAPACITY
AL	ALUMINUM
ATS	AUTOMATIC TRANSFER SWITCH
AWG	AMERICAN WIRE GAUGE
BC	BARE COPPER
BKR	BREAKER
C	CONDUIT/RACEWAY
CEC	CALIFORNIA ENERGY COMMISSION
CKT	CIRCUIT
CLG	CEILING
CO	CONDUIT/RACEWAY ONLY
CT	CURRENT TRANSFORMER
CU	COPPER
DB	DISTRIBUTION BOARD
DDC	DIRECT DIGITAL CONTROLLER
DPDT	DOUBLE-POLE, DOUBLE-THROW
DPST	DOUBLE-POLE, SINGLE-THROW
DWG	DRAWING
(E)	EXISTING TO REMAIN
ELEC	ELECTRICAL
EM	EMERGENCY
EMT	ELECTRICAL METALLIC TUBING
(F)	FUTURE
FLA	FULL LOAD AMPS
FMC	FLEXIBLE METAL CONDUIT (STEEL)
FPEN	FUSE PER EQUIP. NAMEPLATE
GFI	GROUND FAULT INTERRUPT
GFR	GROUND FAULT RELAY
GND	GROUND
HID	HIGH INTENSITY DISCHARGE
HOA	HAND-OFF-AUTO SWITCH
HP	HORSEPOWER
HSKP	HOUSEKEEPING
IMC	INTERMEDIATE METAL CONDUIT
J-BOX	JUNCTION BOX
K	kcmil (300K = 300 kcmil)
KVA	KILOVOLT AMPS
KW	KILOWATT
LTG	LIGHTING
IG	ISOLATED GROUND
MCB	MAIN CIRCUIT BREAKER
MCM	THOUSAND CIRCULAR MILS
MFG	MANUFACTURER
MLO	MAIN LUGS ONLY
MS	MOTOR STARTER
MSB	MAIN SWITCHBOARD
MTS	MANUAL TRANSFER SWITCH
NC	NORMALLY CLOSED
NEC	NATIONAL ELECTRICAL CODE
NEMA	NATIONAL ELECTRICAL MANUFACTURER'S ASSOCIATION
NIC	NOT IN CONTRACT
NL	NIGHTLIGHT
NO	NORMALLY OPEN
NTS	NOT TO SCALE
NVE	NV ENERGY
P	POLE
PH∅	PHASE
PV	PHOTOVOLTAIC
PNL	PANEL
PTC	PV USA TEST CONDITIONS
PWR	POWER
(R)	RELOCATE/RELOCATED
(RR)	REMOVE AND REPLACE
RAC	RIGID ALUMINUM CONDUIT
RFC	RIGID FIBERGLASS CONDUIT
RSC	RIGID STEEL CONDUIT
SE	SERVICE ENTRANCE
SPD	SURGE PROTECTION DEVICE
SPDT	SINGLE-POLE, DOUBLE-THROW
SPST	SINGLE-POLE, SINGLE-THROW
STC	STANDARD TEST CONDITIONS
SW	SWITCH
TE	TELECOM
TTB	TELEPHONE TERMINATION BOARD
TYP	TYPICAL
UL	UNDERWRITER'S LABORATORY
UNO	UNLESS NOTED OTHERWISE
UNSW	UNSWITCHED
UPS	UNINTERRUPTED POWER SUPPLY
V	VOLTS
VA	VOLT AMPS
VFD	VARIABLE FREQUENCY DRIVE
W	WATTS
WP	WEATHER PROOF
(X)	EXISTING TO BE REMOVED
XFMR OR XF	TRANSFORMER

BREAKERS: 20 = SINGLE POLE CIRCUIT BREAKER 20/2 = TWO POLE CIRCUIT BREAKER 20/3 = THREE POLE CIRCUIT BREAKER 20A = ARC FAULT CIRCUIT BREAKER 20C = CONTROLLABLE CIRCUIT BREAKER 20G = GFI CIRCUIT BREAKER

NOTE: THIS IS A MASTER SYMBOL LIST. IT MAY BE THAT NOT ALL SYMBOLS SHOWN ARE USED WITHIN THIS SET OF PLANS. HEIGHTS GIVEN ARE TO TOP OF BOX.

ENGINEERING
742 D STREET
ELKO, NEVADA 89801
TEL: (775) 738 - 3113
FAX: (775) 738 - 6199
WWW.AMENGINEERING.PRO
• ENGINEERING DESIGN & ANALYSIS
• CONSTRUCTION MANAGEMENT
• QA / QC INSPECTIONS
• CONSTRUCTION SURVEYING
• MATERIALS TESTING

CITY OF ELKO

ELKO MOUNTAIN BOOSTER PUMP STATION LEGEND & DRAWING SCHEDULE

ELKO COUNTY NEVADA

CITY OF ELKO

REV	DATE	DESCRIPTION	BY

E0.1

DATE:	FEBRUARY 2024
DRAWN BY:	DJD
DESIGNED BY:	DH
CHECKED BY:	KDP
JOB NO.:	24004

PK Electrical, Inc.
ENGINEERING | DESIGN | CONSULTING
681 Sierra Rose Drive, Suite B | Reno, NV 89511 | 775.826.9010
4601 DTC Boulevard, Suite 740 | Denver, CO 80237 | 720.481.3290
pkelectrical.com | PK#24004

C:\Users\ddreyer\appdata\local\temp\AcPublish_22276\24004-01 - Legend.dwg,Plot - 22x34, 02/12/2024 09:28 am DDreyer

SECTION 260000 ELECTRICAL SPECIFICATIONS

ITEM | DESCRIPTION

PART 1 - GENERAL

1.1 SUMMARY
- THE WORK UNDER THIS DIVISION SHALL CONSIST OF ALL LABOR, MATERIALS, EQUIPMENT, SERVICES AND RELATED ACCESSORIES, ETC. NECESSARY AND REQUIRED TO COMPLETE ALL WORK AS SHOWN OR INFERRED ON THE DRAWINGS AND IN THE SPECIFICATIONS (CONTRACT DOCUMENTS).
- PROVIDE FIXED ELECTRICAL EQUIPMENT, EXCEPT WHERE SPECIFICALLY NOTED OTHERWISE.
- PROVIDE EQUIPMENT AND/OR WIRING NORMALLY FURNISHED OR REQUIRED FOR COMPLETE ELECTRICAL SYSTEMS BUT NOT SPECIFICALLY SPECIFIED ON THE DRAWINGS AND/OR IN SPECIFICATIONS, AS THOUGH SPECIFIED BY BOTH.
- ALL EQUIPMENT AND WIRING SHALL BE NEW, EXCEPT WHERE SPECIFICALLY SHOWN OR SPECIFIED OTHERWISE.

1.2 RELATED WORK SPECIFIED ELSEWHERE
COORDINATION: THE CIVIL, ARCHITECTURAL, MECHANICAL, KITCHEN AND INTERIOR DRAWINGS CONTAIN DETAIL DESCRIPTIONS, CIRCUITING AND CONNECTION REQUIREMENTS WHICH ARE PART OF DIVISION 26 RESPONSIBILITIES. ELECTRICAL CONTRACTOR SHOULD NOT SUBMIT BIDS ON THIS PROJECT BEFORE REVIEWING ALL PROJECT DRAWINGS, SPECIFICATIONS AND ADDENDA.

1.3 ADOPTED CODES
- INTERNATIONAL BUILDING CODE (IBC) PUBLISHED BY THE INTERNATIONAL CODE COUNCIL (ICC).
- NATIONAL ELECTRICAL CODE (NEC) PUBLISHED BY THE NATIONAL FIRE PROTECTION ASSOCIATION (NFPA).
- INTERNATIONAL FIRE CODE (IFC) PUBLISHED BY THE INTERNATIONAL CODE COUNCIL.
- NATIONAL FIRE CODES (NFPA STANDARDS) PUBLISHED BY THE NATIONAL FIRE PROTECTION ASSOCIATION (NFPA) AS REFERENCED IN THE 2006 INTERNATIONAL FIRE CODE.
- INTERNATIONAL ENERGY CONSERVATION CODE (IECC) PUBLISHED BY THE INTERNATIONAL CODE COUNCIL. ASHRAE / IESNA STANDARD 90.1-2004 IS INCORPORATED BY REFERENCE.
- ALL APPLICABLE PROVISIONS OF THE NEVADA REVISED STATUTES (NRS) AND THE NEVADA ADMINISTRATIVE CODE (NAC), INCLUDING THOSE LISTED BELOW.
- THE MOST CURRENT REGULATIONS OF THE STATE FIRE MARSHAL, NEVADA DEPARTMENT OF PUBLIC SAFETY, CARSON CITY, NEVADA (NAC CHAPTER 477, STATE FIRE MARSHAL).
- THE MOST CURRENT EDITION OF THE AMERICANS WITH DISABILITIES ACT (ADA) PUBLISHED BY THE UNITED STATES DEPARTMENT OF JUSTICE INCLUDING THE AMERICANS WITH DISABILITIES ACT ACCESSIBILITY GUIDELINES (ADAAG)

1.4 DEFINITIONS

PROVIDE	FURNISH, INSTALL, CONNECT AND TEST UNTIL COMPLETE
WIRE	FURNISH ALL NECESSARY WIRING, CONNECT AND TEST UNTIL COMPLETE
INSTALL	FURNISH, SET IN PLACE, WIRE AND TEST UNTIL COMPLETE
WORK	MATERIALS COMPLETELY INSTALLED, CONNECTED, AND TESTED UNTIL COMPLETE
EQUAL	ACCEPTABLE EQUAL AS DETERMINED BY THE ENGINEER

1.5 REQUIREMENTS OF REGULATORY AGENCIES
- OBTAIN AND PAY FOR ALL PERMITS AND INSPECTIONS REQUIRED FOR THE WORK. COMPLY WITH ALL ORDINANCES PERTAINING TO WORK DESCRIBED HEREIN. PAY ALL EXPENSES ARISING FROM THE PROCUREMENT OF THESE CERTIFICATES AND INCLUDE IN THE BASE CONTRACT PRICE.
- INSTALL WORK UNDER THIS DIVISION PER DRAWINGS, SPECIFICATIONS, LATEST ADOPTED EDITION OF THE NATIONAL ELECTRICAL CODE, (NFPA-70) INCLUDING LOCAL AMENDMENTS AND INTERPRETATIONS, LOCAL ADOPTED BUILDING CODES, AND ANY SPECIAL CODES HAVING JURISDICTION OVER SPECIFIC PORTIONS OF WORK WITHIN COMPLETE INSTALLATION. IN EVENT OF CONFLICT, INSTALL WORK PER MOST STRINGENT CODE REQUIREMENTS DETERMINED BY ENGINEER. THIS DOES NOT RELIEVE THE CONTRACTOR FROM FURNISHING AND INSTALLING WORK SHOWN OR SPECIFIED WHICH MAY EXCEED THE REQUIREMENTS OF SUCH ORDINANCES, LAWS, REGULATIONS AND CODES.
- ALL MATERIALS, PRODUCTS, DEVICES, FIXTURES, FORMS OR TYPES OF CONSTRUCTION INCLUDED IN THIS PROJECT SHALL MEET OR EXCEED THE PUBLISHED REQUIREMENTS OF NATIONAL ELECTRICAL CODE (NEC), AMERICAN NATIONAL STANDARDS INSTITUTE (ANSI), INSTITUTE OF ELECTRICAL AND ELECTRONICS ENGINEERS (IEEE) AND NATIONAL ELECTRICAL MANUFACTURERS ASSOCIATIONS (NEMA). ALL EQUIPMENT SHALL BEAR THE UNDERWRITER'S LABORATORIES (UL) LABEL OR EQUIVALENT FROM APPROVED INDEPENDENT TESTING LABORATORY.
- ARRANGE, PAY FEES FOR AND COMPLETE WORK TO PASS REQUIRED TESTS BY AGENCIES HAVING AUTHORITY OVER WORK. DELIVER TO ENGINEER COPIES OF THE CERTIFICATES OF INSPECTION AND APPROVAL ISSUED BY AUTHORITIES AND PROVIDE ORIGINAL COPY OF EACH CERTIFICATE TO OWNER.
- WHEN REQUIRED BY LAW OR REGULATIONS, THE GOVERNMENTAL AGENCY HAVING JURISDICTION FOR INSPECTIONS SHALL BE GIVEN REASONABLE NOTICE AND OPPORTUNITY TO INSPECT THE WORK. ANY WORK THAT IS ENCLOSED OR COVERED UP BEFORE SUCH INSPECTION AND TEST SHALL BE UNCOVERED AT THE CONTRACTOR'S EXPENSE; AFTER IT HAS BEEN INSPECTED, THE CONTRACTOR SHALL RESTORE THE WORK TO ITS ORIGINAL CONDITION AT HIS OWN EXPENSE.

1.6 DRAWINGS AND SPECIFICATIONS
- DRAWINGS AND SPECIFICATIONS ARE COMPLEMENTARY. WORK CALLED FOR BY ONE IS BINDING AS IF CALLED FOR BY BOTH. ANY DISCREPANCIES BETWEEN DRAWINGS AND SPECIFICATIONS SHALL BE BROUGHT TO THE ATTENTION OF THE ENGINEER FOR CLARIFICATION DURING THE BIDDING PERIOD. NO ALLOWANCE SHALL SUBSEQUENTLY BE MADE TO THE CONTRACTOR BY REASON OF HIS FAILURE TO HAVE BROUGHT SAID DISCREPANCIES TO THE ATTENTION OF THE CONSULTANT DURING THE BIDDING PERIOD OR BY REASON OF ANY ERROR ON THE CONTRACTOR'S PART.
- DRAWINGS ARE SCHEMATIC AND DIAGRAMMATIC IN NATURE. DRAWINGS SHOW GENERAL RUN OF CIRCUITS AND APPROXIMATE LOCATION OF EQUIPMENT. THE CONTRACTOR SHALL REVIEW DRAWINGS OF ALL TRADES TO ASSURE COORDINATION PRIOR TO PLACEMENT OF WORK. RIGHT IS RESERVED TO CHANGE LOCATION OF EQUIPMENT AND DEVICES, AND ROUTING OF CONDUITS WITHIN 10 FEET, WITHOUT EXTRA COST TO OWNER (PRIOR TO ROUGH-IN).
- USE DIMENSIONS IN FIGURES, SHOP DRAWINGS, ETC. AND ACTUAL SITE MEASUREMENTS IN PREFERENCE TO SCALED DIMENSIONS. DO NOT SCALE DRAWINGS FOR EXACT SIZES OR LOCATIONS - USE DIMENSIONED DETAILS OR ACTUAL FIELD CONDITIONS. VERIFY ITEM MOUNTING HEIGHTS AS REQUIRED BY PROJECT CONDITIONS PRIOR TO ROUGH-IN.
- THE ARCHITECTURAL DRAWINGS SHALL TAKE PRECEDENCE OVER ALL OTHER DRAWINGS IN MATTERS OF DIMENSIONS. DISCREPANCIES BETWEEN DIFFERENT DRAWINGS OR BETWEEN DRAWINGS AND SPECIFICATIONS, OR REGULATIONS AND CODES GOVERNING THE INSTALLATION SHALL BE BROUGHT TO THE ATTENTION OF THE ENGINEER IN WRITING FOR DETERMINATION.
- LAYOUT EQUIPMENT AS SHOWN ON DRAWINGS AS CLOSE AS POSSIBLE. VERIFY ACCESS REQUIREMENTS FOR EQUIPMENT ACTUALLY FURNISHED,AND ADJUST LAYOUT TO COMPLY WITH NEC 110. RIGHT IS RESERVED TO CHANGE LAYOUT WITHIN 10 FEET WITHOUT ADDITIONAL COST (PRIOR TO ROUGH-IN).
- ALL DEVICES, LIGHT FIXTURES, ETC. LOCATED IN CEILING TILES SHALL BE LOCATED IN THE CENTER OF THE CEILING TILE UNLESS SPECIFICALLY NOTED OR APPROVED TO DO OTHERWISE.
- THE CONTRACTOR IS RESPONSIBLE TO FIELD MEASURE AND CONFIRM THE MOUNTING HEIGHTS AND LOCATION OF ELECTRICAL EQUIPMENT WITH RESPECT TO COUNTERS, DOORWAYS, AND OTHER ARCHITECTURAL, MECHANICAL OR STRUCTURAL WORK. DO NOT SCALE DISTANCES OFF THE ELECTRICAL DRAWINGS. USE ACTUAL BUILDING DIMENSIONS.
- EXECUTION OF CONTRACT IS EVIDENCE THAT CONTRACTOR HAS EXAMINED ALL EXISTING CONDITIONS, DRAWINGS AND SPECIFICATIONS RELATED TO WORK, AND IS INFORMED AS TO EXTENT AND CHARACTER OF WORK. LATER CLAIMS FOR LABOR AND MATERIALS REQUIRED DUE TO DIFFICULTIES ENCOUNTERED, WHICH COULD HAVE BEEN FORESEEN HAD EXAMINATION BEEN MADE, WILL NOT BE RECOGNIZED.
- ALL WORK CALLED FOR IN THIS SECTION OF THE PLANS AND SPECIFICATIONS SHALL BE PERFORMED UNDER THIS SECTION, REGARDLESS OF WHETHER SUCH WORK MAY ALSO HAVE BEEN CALLED FOR IN OTHER SECTION(S). DISCREPANCIES IN OR CONFLICTS AMONG THE VARIOUS PARTS OF THE CONTRACT DRAWINGS SHALL NOT RELIEVE CONTRACTOR OF HIS OBLIGATION TO PERFORM.
- NO ATTEMPT HAS BEEN MADE TO ESTABLISH THE REQUIRED SECTIONS OR SPLITS OF EQUIPMENT RELATIVE TO THE SIZE OF ACCESS INTO THE SPACE, BUILDING, ETC. CONTRACTOR SHALL ESTABLISH ALL SAID SPLITS, SECTIONS, ETC. NECESSARY TO INSTALL EQUIPMENT COMPLETE WITHOUT UNDUE DISASSEMBLY OF EQUIPMENT OR DEMOLITION OF BUILDING PARTS AT SITE OF WORK.
- CHARGES FOR EXTRA WORK ARE NOT ALLOWED UNLESS WORK IS AUTHORIZED BY WRITTEN ORDER FROM THE OWNER'S REPRESENTATIVE APPROVING CHARGES FOR WORK.
- CHECK ALL DOOR SWINGS SO LIGHTING CONTROL DEVICES ARE NOT LOCATED BEHIND DOORS. RELOCATE DEVICES AS REQUIRED WITH THE CONSULTANT'S REVIEW.

1.7 COPYRIGHT
THESE PLANS, SPECIFICATIONS, AND ALL RELATED ADDENDA AND DOCUMENTS CONSTITUTE COPYRIGHT MATERIALS OF PK ELECTRICAL. ALL RIGHTS CONFERRED BY THE COPYRIGHT AND SIMILAR LAWS ARE RESERVED TO PK ELECTRICAL. THESE MATERIALS SHALL REMAIN THE SOLE PROPERTY OF PK ELECTRICAL AND MAY NOT BE REPRODUCED, DISTRIBUTED TO OTHERS OR USED FOR ANY PURPOSE WHATSOEVER WITHOUT THE PRIOR WRITTEN CONSENT OF PK ELECTRICAL.

1.8 SUBMITTALS
BEFORE ORDERING ANY EQUIPMENT, CONTRACTOR SHALL SUBMIT SIX COPIES OF FACTORY SHOP DRAWINGS FOR ALL LIGHTING FIXTURES, LIGHTING CONTROLS, SWITCHGEAR, PANELS, CIRCUIT BREAKERS, MOTOR CONTROLLERS, DISCONNECTS WIRING DEVICES, PLATES, RACEWAYS AND FITTINGS, ETC. PROPOSED FOR THIS PROJECT.

1.9 SUBSTITUTIONS
PROPOSED SUBSTITUTIONS SHALL BE EQUAL OR SUPERIOR TO SPECIFIED ITEMS IN ALL RESPECTS. DETERMINATION OF EQUALITY RESTS SOLELY WITH ENGINEER. SUBSTITUTIONS MUST BE SUBMITTED A MINIMUM OF 10 WORKING DAYS PRIOR TO BID FOR CONSIDERATION. PROPOSED SUBSTITUTIONS PROVIDED LATER WILL NOT BE REVIEWED OR ALLOWED. BID SUBSTITUTED MATERIAL WILL ONLY BE ALLOWED IF ACCEPTED IN WRITING BY ENGINEER.

1.10 EXAMINATION OF SITE AND EXISTING CONDITIONS
BEFORE SUBMITTING A PROPOSAL, CONTRACTOR SHALL EXAMINE THE SITE AND FAMILIARIZE HIMSELF WITH THE EXISTING CONDITIONS AND LIMITATIONS. NO EXTRAS WILL BE ALLOWED BECAUSE OF THE CONTRACTOR'S MISUNDERSTANDING OF THE AMOUNT OF WORK INVOLVED OR HIS LACK OF KNOWLEDGE OF ANY SITE CONDITIONS WHICH MAY AFFECT HIS WORK. ANY APPARENT VARIANCE OF THE DRAWINGS OR SPECIFICATIONS FROM THE EXISTING CONDITIONS AT THE SITE SHALL BE CALLED TO ATTENTION OF THE ENGINEER BEFORE SUBMITTING A PROPOSAL.

1.11 EXISTING OUTLETS
EXISTING OUTLETS AND CIRCUITING NOT IN CONFLICT WITH NEW CONDITIONS SHALL REMAIN. EXTEND OUTLETS TO NEW SURFACES, CAULK AND PROVIDE JUMBO PLATES AS REQUIRED TO PRESENT A SERVICEABLE AND FINISHED APPEARANCE.

1.12 EXISTING SWITCHGEAR
REUSE EXISTING SWITCHGEAR AND PANELS IN PLACE WHERE SO INDICATED. MODIFY AS REQUIRED TO ACCOMMODATE NEW WORK. PROVIDE NEW CIRCUIT BREAKERS AND/OR FUSES AS REQUIRED. MATCH AIC RATINGS. REARRANGE EXISTING CIRCUITS WITHIN PANELS TO AGREE WITH NEW PANEL SCHEDULES. TRACE AND IDENTIFY ALL EXISTING CIRCUITS ON NEW RECORD PANEL SCHEDULES.

1.13 EXISTING PANELBOARDS
- RING OUT CIRCUITS IN EXISTING PANELS. WHERE ADDITIONAL CIRCUITS ARE NEEDED REUSE CIRCUITS AVAILABLE FOR REUSE. INSTALL NEW BREAKERS AS INDICATED ON DRAWINGS. MATCH AIC RATINGS.
- TAG UNUSED CIRCUITS AS SPARE.
- WHERE EXISTING CIRCUITS ARE INDICATED TO BE REUSED, USE SENSING MEASURING DEVICES TO VERIFY THAT CIRCUITS FEEDING PROJECT AREA ARE NOT IN USE OR OVERLOADED.
- REMOVE EXISTING WIRE NO LONGER IN USE FROM PANEL TO EQUIPMENT.
- PROVIDE NEW UPDATED TYPED DIRECTORIES.

PART 2 - PRODUCTS

2.1 MATERIALS
- ALL MATERIAL SHALL BE NEW, AND HAVE A UL LABEL WHERE AVAILABLE. IF UL LABEL IS NOT AVAILABLE, MATERIAL SHALL BE MANUFACTURED IN ACCORDANCE WITH APPLICABLE NEMA, IEEE AND FEDERAL STANDARDS. USE UL LABELED COMPONENTS IN ASSEMBLIES THAT DO NOT HAVE OVERALL UL LABEL. ALL EQUIPMENT SHALL COMPLY WITH THE TERMS "LISTED AND LABELED" AS DEFINED IN THE NEC 70, ARTICLE 100. SUBMIT LETTER STATING COMPLIANCE WITH THESE REQUIREMENTS.
- UTILIZE ONE OF THE MANUFACTURERS LISTED TO FURNISH ALL OF THE MAJOR EQUIPMENT (I.E. PANELS, TRANSFORMERS, BUS DUCT, SWITCHGEAR, CIRCUIT BREAKERS, ETC.) REQUIRED FOR THIS PROJECT.
- ALL MATERIAL AND EQUIPMENT SHALL BE NEW AND OF THE HIGHEST QUALITY AVAILABLE ("SPECIFICATION GRADE"). SERVICE EQUIPMENT SHALL BE FACTORY-ASSEMBLED COMMERCIAL-GRADE, CONFIGURED PER SERVING UTILITY STANDARDS. WIRING DEVICES SHALL BE SPECIFICATION GRADE WITH NYLON PLATES, WHITE UNLESS OTHERWISE NOTED, RAISED STEEL BOX COVERS MAY BE USED IN UTILITY AREAS.
- ALL EQUIPMENT AND CIRCUITING ACCESSIBLE BY THE PUBLIC SHALL BE TAMPER-PROOF AND VANDAL RESISTANT. OPENABLE DEVICES AND EQUIPMENT SHALL BE PADLOCKABLE.

2.2 DISTRIBUTION EQUIPMENT
DISTRIBUTION EQUIPMENT SHALL BE DEAD-FRONT, PANELBOARD OR SWITCHBOARD TYPE AS INDICATED, UL-LABELED AND ENCLOSED IN A NEMA HOUSING APPROPRIATE TO ITS LOCATION AND APPLICATION WITH HINGED WIREWAY COVERS. BUSSING, DEVICE FINGERS AND LUGS SHALL BE COPPER UNLESS INDICATED ON DRAWINGS. AIC RATINGS SHOWN ON PLANS ARE MINIMUM RATINGS; CIRCUIT BREAKERS SHALL BE IN EXCESS OF THE AVAILABLE FAULT CURRENT. SERIES-RATING OF UPSTREAM AND DOWNSTREAM CIRCUIT BREAKERS TO ACHIEVE REQUIRED FAULT CURRENT RATINGS IS PROHIBITED UNLESS APPROVED BY ENGINEER IN WRITING.

2.3 PANELBOARDS
PANELS SHALL HAVE FLUSH MONO-FLAT TRIM, LOCKING DOOR-IN-DOOR HINGED COVERS AND BOLT-ON CIRCUIT BREAKERS. BUSSING SHALL BE COPPER UNLESS INDICATED ON DRAWINGS. FLUSH-MOUNTED PANELS SHALL HAVE EMPTY CONDUITS STUBBED TO ACCESSIBLE ATTIC SPACE: ONE 1" CONDUIT FOR EACH FOUR SPARE/SPACE CIRCUITS. PROVIDE ONE TYPED AND ONE SPARE PANEL SCHEDULE FOR OWNER'S USE. SCHEDULES SHALL BE TWO COLUMN TYPE WITH ODD CIRCUIT NUMBERS ON THE LEFT AND EVEN NUMBERS ON THE RIGHT.

2.4 TRANSFORMERS
TRANSFORMERS SHALL BE SELF VENTILATED DRY-TYPE WITH COPPER BUSSING UNLESS INDICATED OTHERWISE AND SHALL BE UL LISTED AS SUITABLE FOR INSTALLATION IN INTERIOR LOCATIONS. INSULATION SHALL BE MINIMUM 220 DEGREE CELSIUS OPERATION. PROVIDE SIX 2 1/2% VOLTAGE ADJUSTING TAPS - TWO ABOVE AND FOUR BELOW RATED PRIMARY VOLTAGE. IMPEDANCE FOR UNITS ABOVE 15KVA SHALL BE MINIMUM 5%. TRANSFORMERS SHALL BE CONNECTED WITH SEALTIGHT FLEXIBLE CONDUIT WITH SEPARATE INTERNAL GROUND WIRE.

2.5 CIRCUITING
ALL WIRING SHALL BE IN CONDUIT, CONCEALED EXCEPT WHERE NOTED. EMT WITH STEEL SET SCREW INSULATED-THROAT FITTINGS SHALL BE USED IN DRY, PROTECTED INTERIOR LOCATIONS. PVC SCHEDULE 40 SHALL BE USED BELOW GRADE AT MINIMUM-24". WRAPPED RIGID ELBOWS AND RISERS SHALL BE USED FOR ALL THROUGH-GRADE AND CONCRETE SLAB TRANSITIONS AND STUB-UPS. RGS OR IMC CONDUIT WITH THREADED FITTINGS SHALL BE USED IN ALL LOCATIONS WHERE EXPOSED TO THE ELEMENTS OR SUBJECT TO PHYSICAL DAMAGE. FMC MAY BE USED FOR FINAL CONNECTION TO LIGHTING FIXTURE FROM J-BOX. FIXTURE WHIPS MAY NOT EXCEED 6' IN LENGTH. METAL CLAD CABLE (TYPE MC) MAY NOT BE USED. ENT IS NOT ALLOWED. CONNECT RECESSED AND SUSPENDED LIGHTING FIXTURES, MOTORIZED AND VIBRATING EQUIPMENT WITH STEEL FLEX. ALL CONDUIT SHALL HAVE PULL CORD IF OTHERWISE EMPTY. CONNECT PUMP MOTORS WITH LIQUID TIGHT FLEXIBLE METAL CONDUIT.

2.6 WIRING
- WIRE SHALL BE COPPER UNLESS OTHERWISE INDICATED. MINIMUM WIRE SIZE SHALL BE #12 AWG. WHERE ALUMINUM IS ALLOWED, WIRE SHALL BE TERMINATED IN AN INSULATED CU/AL RATED COMPRESSION TERMINAL FITTING (MAC-ADAPT OR EQUAL). INSULATION SHALL BE THW, THWN OR THHN.
- UNLESS OTHERWISE REQUIRED BY LOCAL ORDINANCES, GROUND WIRES SHALL BE GREEN, NEUTRAL WIRES SHALL BE WHITE (120V) OR GREY (277V) AND PHASE WIRES SHALL BE BLACK (PHASE A), RED (PHASE B), AND BLUE (PHASE C) FOR A 120/208 VOLT SYSTEM AND BROWN (PHASE A), ORANGE (PHASE B), AND YELLOW (PHASE C) FOR A 277/480 VOLT SYSTEM.

2.7 FUSES
FUSES SHALL BE SIZED PER ACTUAL NAMEPLATE OF EQUIPMENT SERVED. FUSES SHALL BE DUAL-ELEMENT, CURRENT-LIMITING, AND SHALL BE INTERCHANGEABLE BETWEEN FRAME SIZES WITH STANDARD FACTORY FUSE REDUCERS. FUSES SHALL BE AS FOLLOWS UNLESS OTHERWISE INDICATED:
- CIRCUITS 601 TO 6000 AMPERES SHALL BE PROTECTED BY CURRENT LIMITING BUSSMANN LOW-PEAK TIME-DELAY FUSES KRP-C - UL CLASS L.
- CIRCUITS 0 TO 600 AMPERES SHALL BE PROTECTED BY CURRENT LIMITING BUSSMANN LOW-PEAK DUAL-ELEMENT FUSES LPN-RK (600 VOLTS) - UL CLASS RK1.
- ALL DUAL-ELEMENT FUSES SHALL HAVE SEPARATE OVERLOAD AND SHORT-CIRCUIT ELEMENTS.
- PROVIDE SPARE FUSE CABINET AFTER THE COMPLETION OF THE PROJECT WITH ONE SET OF SPARE FUSES FOR EVERY SIZE USED.

2.8 WIRING DEVICES
WIRING DEVICES SHALL BE AS FOLLOWS:
- RECEPTACLES - 120V, 20A, NEMA 5-20R, SPECIFICATION GRADE, SIDE AND BACK WIRED WITH CLAMP TYPE TERMINALS, NYLON, WHITE, 2 POLE, 3 WIRE GROUNDING.
- SWITCHES - 120V/277V, 20A, WHITE, HEAVY DUTY, SILENT TYPE SPECIFICATIONS GRADE.
- DEVICE PLATE SHALL BE NYLON, WHITE COLOR WITH MATCHING SCREWS.
- RECEPTACLES IN WET LOCATIONS SHALL BE INSTALLED WITH A HINGED OUTLET COVER/ENCLOSURE CLEARLY MARKED SUITABLE FOR WET LOCATIONS WHILE IN USE AND UL LISTED EQUAL TO TAY MAC SPECIFICATIONS GRADE.

PART 3 - EXECUTION

3.1 VISIT TO SITE
VISIT SITE, AND SURVEY EXISTING CONDITIONS AFFECTING WORK PRIOR TO BID. INCLUDE NECESSARY MATERIALS AND LABOR TO ACCOMPLISH THE ELECTRICAL WORK, INCLUDING RELOCATION OF EXISTING SERVICES AND UTILITIES ON BUILDING SITE IN BID. NO CONSIDERATION SHALL BE GIVEN TO FUTURE CLAIMS DUE TO EXISTING CONDITIONS. ANY DISCREPANCIES OR INTERFERENCES SHALL BE REPORTED IMMEDIATELY TO THE ENGINEER.

3.2 WORKMANSHIP
- ALL WORK PERFORMED SHALL BE FIRST CLASS WORK IN EVERY ASPECT. THE WORK SHALL BE PERFORMED BY MECHANICS SKILLED IN THEIR RESPECTIVE TRADES, WHO SHALL AT ALL TIMES BE UNDER THE SUPERVISION OF COMPETENT PERSONS. ALL WORK SHALL BE INSTALLED TO COMPLY WITH NECA'S "STANDARD OF INSTALLATION."
- IN ADDITION TO THE MATERIALS SPECIFIED ELSEWHERE, FURNISH AND INSTALL ALL OTHER MISCELLANEOUS ITEMS NECESSARY FOR THE COMPLETION OF THE WORK TO THE EXTENT THAT ALL SYSTEMS ARE COMPLETE AND OPERATIVE.

3.2
- IN ADDITION TO THE MATERIALS SPECIFIED ELSEWHERE, FURNISH AND INSTALL ALL OTHER MISCELLANEOUS ITEMS NECESSARY FOR THE COMPLETION OF THE WORK TO THE EXTENT THAT ALL SYSTEMS ARE COMPLETE AND OPERATIVE.
- ALL WORK UNDER THIS SECTION SHALL BE PERFORMED IN COOPERATION WITH THE WORK PERFORMED UNDER ALL OTHER SECTIONS OF THE SPECIFICATIONS FOR THE PROJECT IN ORDER TO AVOID INTERFERENCE WITH OTHER WORK AND TO SECURE THE PROPER INSTALLATION OF ALL WORK. REFER THE DRAWINGS AND SPECIFICATIONS COVERING THE WORK TO BE PERFORMED UNDER ALL SECTIONS, SO THAT THE RELATION AND EXTENT OF THE WORK OF THIS SECTION WITH RESPECT TO THE WORK OF ALL OTHER SECTIONS IS UNDERSTOOD. GIVE RIGHT OF WAY TO RACEWAYS AND PIPING SYSTEMS INSTALLED AT A REQUIRED SLOPE.
- CONDUIT SYSTEMS MUST BE COMPLETE PRIOR TO INSTALLATION OF WIRING.

3.3 CHANGE ORDERS
- ADDITIONAL WORK MAY BE REQUIRED ON THE PROJECT WHICH IS OUTSIDE THE SCOPE OF THE CONTRACT. SUCH ADDITIONAL WORK WILL BE DESCRIBED IN SUPPLEMENTAL INSTRUCTIONS AND/OR CLARIFICATIONS, TO BE ESTIMATED AND PRICED BY THE CONTRACTOR, AND ACCEPTED BY THE OWNER, PRIOR TO COMMENCING WORK. PROPOSALS SHALL INCLUDE A LIST OF QUANTITIES OF ALL MATERIAL BEING USED WITH UNIT COSTS BROKEN DOWN INTO MATERIAL AND LABOR COSTS PER UNIT. CONTRACTOR SHALL PROVIDE ACTUAL EQUIPMENT QUOTES WHEN REQUESTED BY ENGINEER.
- MATERIAL COSTS AND LABOR UNITS SHALL NOT EXCEED THE LATEST EDITION OF RS MEANS ELECTRICAL COST DATA.

3.4 GUARANTEE
- FURNISH THE OWNER A WRITTEN GUARANTEE, STATING THAT IF THE WORKMANSHIP AND/OR MATERIAL EXECUTED UNDER THIS DIVISION IS PROVEN DEFECTIVE WITHIN (1) YEAR AFTER THE FINAL ACCEPTANCE BY THE OWNER, SUCH DEFECTS AND OTHER WORK DAMAGED WILL BE REPAIRED AND/OR REPLACED. SUBMIT WITH OPERATION AND MAINTENANCE MANUALS.
- OBTAIN FROM THE VARIOUS MANUFACTURERS OR VENDORS GUARANTEES OR WARRANTIES FOR THEIR PARTICULAR EQUIPMENT OR COMPONENTS, AND DELIVER THEM TO THE OWNER. ALL GUARANTEES AND WARRANTIES PROVIDED SHALL BE REFERENCED TO THIS PROJECT.
- IN EVENT THAT SYSTEMS ARE PLACED IN OPERATION IN SEVERAL PHASES AT THE OWNER'S REQUEST, GUARANTEE WILL BEGIN ON DATE EACH SYSTEM OR ITEM OF EQUIPMENT IS ACCEPTED FOR SERVICE BY THE OWNER. PROVIDE O&M MANUALS FOR ALL EQUIPMENT WHEN EQUIPMENT IS ACCEPTED FOR SERVICE BY THE OWNER.
- ALL GUARANTEES AND WARRANTIES SHALL INCLUDE LABOR AND MATERIAL AT THE SITE OF INSTALLATION FOR THE DURATION OF THE GUARANTEE PERIOD.

3.5 OBSERVATIONS OF WORK AND DEMONSTRATION OF OPERATION (ACCEPTANCE)
- AT ALL OBSERVATIONS OF WORK, OPEN PANEL COVERS, JUNCTION BOX COVERS, PULL BOX COVERS, DEVICE COVERS, AND OTHER EQUIPMENT WITH REMOVABLE PLATES FOR OBSERVATION AS REQUESTED BY AHJ OR ENGINEER. PROVIDE SUFFICIENT PERSONNEL TO EXPEDITE COVER REMOVAL AND REPLACEMENT.
- CONTRACTOR TO DEMONSTRATE OPERATION OF NEW EQUIPMENT AND/OR SYSTEMS TO SATISFACTION OF OWNER/ENGINEER. CONTRACTOR TO HAVE MANUFACTURER AVAILABLE FOR DEMONSTRATION OF EQUIPMENT AND/OR SYSTEMS WHERE REQUESTED BY OWNER/ENGINEER. FURNISH AFFIDAVIT SIGNED BY OWNER'S REPRESENTATIVE INDICATING THAT DEMONSTRATION OF OPERATION HAS BEEN PERFORMED.

3.6 COOPERATION
- CAREFULLY COORDINATE WORK WITH OTHER CONTRACTORS AND SUBCONTRACTORS. REFER CONFLICTS BETWEEN TRADES TO ENGINEER. PROVIDE NECESSARY INFORMATION TO OTHER TRADES FOR SUCH COORDINATION. SUCH INFORMATION SHALL INCLUDE SHOP DRAWINGS, PRODUCT DATA AND ALL OTHER REQUIRED DATA. PROVIDE A SYSTEM ERECTION/COORDINATION DRAWING SHOWING ELECTRICAL, HVAC, PLUMBING AND ARCHITECTURAL FOR INSTALLATION IN CONGESTED AREAS, WHEN REQUESTED.
- WHENEVER SUCH INFORMATION IS NOT PROVIDED IN A TIMELY MANNER OR WHENEVER SUCH INFORMATION IS INCORRECT, THIS CONTRACTOR SHALL BEAR ALL COSTS FOR PROVIDING OR CORRECTING AFFECTED WORK OF RELATED TRADES WITH NO CHANGE TO THE CONTRACT PRICE OR CONSTRUCTION SCHEDULE.
- WORK TO BE INSTALLED AS PROGRESS OF PROJECT WILL ALLOW. SCHEDULE OF WORK DETERMINED BY GENERAL CONTRACTOR, OWNER, AND/OR ARCHITECT/ENGINEER.

3.7 COORDINATION OF UTILITY SERVICES
- DRAWINGS INDICATE PROPOSED SERVICE LAYOUTS. THE CONTRACTOR SHALL PROVIDE ALL CONCRETE STRUCTURES, PULLBOXES, VAULTS, TRENCHING, RACEWAYS, PROTECTIVE BOLLARDS, ETC., AS REQUIRED PER NV ENERGY STANDARDS (ELECTRICAL UTILITY), AT&T (TELEPHONE COMPANY) AND CHARTER (CATV UTILITY) STANDARDS.
- CONTRACTOR IS RESPONSIBLE FOR SUBMITTING PROJECT DRAWINGS, APPLICATION, AND EQUIPMENT SHOP DRAWINGS TO THE UTILITY. UTILITY FEES TO BE PAID BY PROJECT OWNER.

3.8 HVAC CONTROL WIRING
- CONTROL WIRING INCLUDING LOW VOLTAGE AND LINE VOLTAGE INTERLOCK WIRING WILL BE FURNISHED AND INSTALLED UNDER DIVISION 23, EXCEPT WHERE SPECIFICALLY SHOWN OTHERWISE. CAREFULLY COORDINATE POWER AND CONTROL WIRING INTERFACE.
- THIS CONTRACTOR SHALL OBTAIN FROM DIVISION 23 ALL WIRING DIAGRAMS ASSOCIATED WITH THE HVAC WORK AND FURNISH ALL POWER AND 120V CONTROL WIRING, DISCONNECTS AND STARTERS FOR EQUIPMENT NOT ALREADY PACKAGED WITH THESE ITEMS. THE CONTRACTOR SHALL INCLUDE IN HIS BID CONNECTIONS, DISCONNECTS AND CIRCUITING FOR ALL ADDED AND RELOCATED EQUIPMENT AS DIRECTED BY THE TEMPERATURE CONTROLS CONTRACTOR EVEN IF IT IS NOT SHOWN ON THE BID DOCUMENTS. ALL WIRING AND CONDUIT ASSOCIATED WITH THE HVAC TEMPERATURE CONTROL SYSTEM IS INCLUDED UNDER DIVISION 23. WIRING AND CONDUIT SHALL COMPLY WITH DIVISION 26. ALL ELECTRICAL WORK ASSOCIATED WITH THE HVAC SYSTEM SHALL BE DONE UNDER THE SUPERVISION OF DIVISION 23.

3.9 STARTERS
SEPARATELY MOUNTED STARTERS ARE FURNISHED AND INSTALLED UNDER DIVISION 26 UNLESS SPECIFICALLY SHOWN OTHERWISE. ALL POWER WIRING, FUSES, THERMAL OVERLOADS, AND DISCONNECT SWITCHES AND CONNECTION OF ALL MOTORS IS UNDER THIS DIVISION. PROVIDE THE PROPER FUSING AND THERMAL OVERLOADS AS RECOMMENDED BY THE MANUFACTURER OF THE EQUIPMENT.

3.10 DELIVERY, STORAGE AND HANDLING
- DELIVER EQUIPMENT AND MATERIALS TO JOB SITE IN ORIGINAL, UNOPENED, LABELED CONTAINER. PRODUCTS SHALL BE PROPERLY IDENTIFIED WITH NAMES, MODEL NUMBERS, TYPES, GRADES, COMPLIANCE LABELS AND OTHER INFORMATION NEEDED FOR IDENTIFICATION. STORE TO PREVENT DAMAGE AND INJURY. STORE MATERIALS TO PREVENT CORRODING. STORE FINISHED MATERIALS AND EQUIPMENT TO PREVENT STAINING AND DISCOLORING. STORE MATERIALS AFFECTED BY CONDENSATION IN WARM DRY AREAS. PROVIDE HEATERS. CONTRACTOR SHALL VERIFY THE AVAILABILITY OF ON SITE STORAGE SPACE, IF NO ON SITE STORAGE SPACE IS AVAILABLE THEN THE CONTRACTOR SHALL COVER THE COST FOR OFF SITE STORAGE. MATERIALS STORED AT THE PROJECT SITE THAT BECOMES SOILED WITH CONSTRUCTION DIRT, CONCRETE, OR MOISTURE SHALL BE REMOVED FROM THE SITE AND REPLACED WITH NEW. DO NOT INSTALL SOILED MATERIAL.
- INSTALL EQUIPMENT PER MANUFACTURER'S RECOMMENDATIONS. CONFLICTS BETWEEN CONTRACT DOCUMENTS AND THESE RECOMMENDATIONS SHALL BE REFERRED TO ENGINEER FOR REMEDY.
- ELECTRICAL OR ELECTRONIC EQUIPMENT THAT HAS BEEN DAMAGED, EXPOSED TO WEATHER OR IS, IN THE OPINION OF THE ENGINEER OR ARCHITECT, OTHERWISE UNSUITABLE BECAUSE OF IMPROPER FABRICATION, STORAGE OR INSTALLATION SHALL BE REMOVED AND REPLACED BY THIS CONTRACTOR AT HIS EXPENSE.

3.11 ANCHORS
- PROVIDE ANCHORS FOR ALL EQUIPMENT, RACEWAYS, HANGERS, ETC. TO SAFELY SUPPORT WEIGHT OF ITEM INVOLVED PLUS 100% FOR DEAD LOADS. LIVE LOADS SHALL BE CONSIDERED IN ADDITION TO DEAD LOADS.
- ANCHORS TO CONSIST OF EXPANSION TYPE DEVICES SIMILAR TO "REDHEAD" OR LEAD EXPANSION ANCHORS. PLASTIC ANCHORS ARE NOT ACCEPTABLE.
- USE PRESET ANCHOR STEEL INSERTS IN CONCRETE SLABS. PROVIDE PRESET ANCHOR SIZE AND TYPE FOR ANTICIPATED OR SPECIFIED ROD/BOLT SIZE AND LIVE/DEAD LOAD.

3.12 HOUSEKEEPING PADS
FURNISH 2500 # CONCRETE PADS, 4" HIGH (INTERIOR LOCATIONS) OR 6" HIGH (EXTERIOR LOCATIONS) UNLESS OTHERWISE NOTED, FOR ALL FREESTANDING EQUIPMENT, I.E. SWITCHBOARDS, PANELS, CONTROL PANELS, MOTOR CONTROL CENTERS, TRANSFORMERS, ETC. PADS SHALL HAVE 1" X 45° CHAMFERED EDGES, AND SHALL EXTEND 2" TO 4" BEYOND EQUIPMENT MOUNTINGS.

3.13 CLEANING AND PAINTING
- CLEAN EQUIPMENT FURNISHED IN THIS DIVISION AFTER COMPLETION OF WORK. CLEAN WIPE THE INTERIOR OF ALL CONDUIT, PULLBOXES, JUNCTION BOXES, OUTLET BOXES, AND PANELBOARD BACKBOXES SOILED WITH DIRT AND DEBRIS PRIOR TO INSTALLATION OF WIRING.

TOUCH-UP OR RE-PAINT DAMAGED PAINTED FINISHES AS DETERMINED BY THE ENGINEER.

3.14 RECORD DRAWINGS
- CONTRACTOR SHALL PROVIDE, PRIOR TO FINAL ACCEPTANCE AND OBSERVATION, ONE-SET OF REVISED RECORD ELECTRICAL CONSTRUCTION DOCUMENTS ON REPRODUCIBLE MEDIUM. ALSO INCLUDE THE FOLLOWING INFORMATION:
  EXACT ROUTING OF ALL CONDUITS LARGER THAN ONE INCH.
  EXACT LOCATION OF ALL SERVICE GROUNDING/ BONDING CONNECTIONS.
  CONTRACTORS NAME, ADDRESS, AND TELEPHONE NUMBER.
- RECORD NOTATIONS SHALL BE CLEARLY DRAWN AT A DRAFTING APPEARANCE EQUAL TO THE ORIGINAL DRAWINGS. CONTRACTOR SHALL ALSO PROVIDE ALL OPERATING AND MAINTENANCE MANUALS PRIOR TO FINAL PAYMENT.

3.15 ELECTRICAL SYSTEM TESTING
PRIOR TO PLACING IN SERVICES, ALL ELECTRICAL SYSTEMS SHALL BE TESTED FOR OPENS, GROUNDS, AND PHASE ROTATION. THE MAIN SERVICE GROUND AND ALL LOCAL TRANSFORMER MADE GROUNDS SHALL BE MEGGER-TESTED. PROVIDE GFI TESTING FOR SERVICE SWITCHBOARD. THE CONTRACTOR SHALL RETAIN THE SERVICES OF AN INDEPENDENT TESTING FIRM DEEMED BY THE OWNER AS QUALIFIED TO PERFORM INTERNATIONAL ELECTRICAL TESTING ASSOCIATION TESTING. TESTING SERVICES SHALL BE PAID FOR AND COORDINATED BY THE CONTRACTOR. NETA TESTING PROCEDURES AND REQUIREMENTS FOR TESTED VALUES SHALL BE IN ACCORDANCE WITH THE MOST CURRENT EDITION OF THE NETA ACCEPTANCE TESTING SPECIFICATIONS. ANY DEFICIENCIES OR FAILURES DISCOVERED DURING THE NETA TESTING PROCEDURES SHALL BE PROMPTLY CORRECTED BY THE ENSURE TIMELY COMPLETION OF THE PROJECT AND TO MINIMIZE THE TIME REQUIRED FOR THE INDEPENDENT TESTING FIRM TO COMPLETE THEIR WORK.
TESTING REQUIREMENTS SHALL BE AS FOLLOWS:
- GROUNDING SYSTEM
- GROUND FAULT PROTECTION
- CIRCUIT BREAKERS (OVER 100A)
- LOW VOLTAGE FEEDERS (UP TO 600 VOLTS) SERVING LOADS OF 100 AMPS OR GREATER
- MAIN SWITCHBOARD; DISTRIBUTION BOARDS; BRANCH CIRCUIT PANELS.
- LIGHTING CONTROL SYSTEMS
- FIRE ALARM SYSTEM

3.16 IDENTIFICATION
- PROVIDE ENGRAVED NAMEPLATES FOR ALL SWITCHBOARDS, PANELS, TRANSFORMERS, DISCONNECTS, MOTOR STARTERS, CONTACTORS, TIME SWITCHES AND CABINETS. NAMEPLATES SHALL BE WHITE LETTERS ON BLACK FOR NORMAL EQUIPMENT AND WHITE LETTERS ON RED FOR EMERGENCY EQUIPMENT. NAMEPLATES SHALL INCLUDE THE FOLLOWING INFORMATION AS APPLICABLE:
  DESIGNATION (I.E. PANEL A); FUNCTION (I.E. AIR HANDLER AH-1); VOLTAGE, PHASE, WIRE (I.E. 480 VOLT, 3 PHASE, 4W); FEEDER SIZE (I.E. 4-#4/0 THWN CU IN 2" C); SOURCE (I.E. SWITCHBOARDS MSB).
- JUNCTION, PULL AND CONNECTION BOXES: IDENTIFICATION OF SYSTEMS AND CIRCUITS SHALL INDICATE SYSTEM VOLTAGE AND CONTAINED CIRCUITS ON OUTSIDE OF BOX COVER. USE SELF-ADHESIVE MARKING TAPE LABELS AT EXPOSED LOCATIONS AND INDELIBLE BLACK MARKER AT CONCEALED BOXES. ALL FIRE ALARM BOXES SHALL HAVE COVERS PAINTED RED. ALL TEMPERATURE CONTROL BOXES SHALL HAVE COVERS PAINTED BLUE.
- BRANCH CIRCUIT CONDUCTORS SHALL BE IDENTIFIED IN EACH JUNCTION BOX AND PULL BOX WITH WIRE MARKERS AS MANUFACTURED BY T&B, PANDUIT, 3M, OR IDEAL TO INDICATE PANEL/CIRCUIT NUMBER.
- JUNCTION BOX COVERS IN BRANCH CIRCUIT WIRING SHALL BE LABELED WITH PANEL AND CIRCUIT NUMBERS. JUNCTION BOX COVERS FOR SPECIAL SYSTEMS SHALL BE LABELED WITH SYSTEM NAME AND OTHER IDENTIFICATION AS DIRECTED; FOR EXAMPLE, "FIRE ALARM-ZONE 1". WHERE BOXES ARE INSTALLED FLUSH MOUNTED IN FINISHED AREAS OR SURFACE MOUNTED IN UNFINISHED AREAS, LABELING SHALL BE WITH ENGRAVED PLASTIC NAMEPLATE AS SPECIFIED HEREIN. WHERE BOXES ARE INSTALLED ABOVE ACCESSIBLE CEILINGS, LABELING MAY BE NEAT HAND WRITTEN LETTERING WITH INDELIBLE MARKER.
- DEVICE PLATES - SWITCHES AND RECEPTACLES: IDENTIFY THE PANELBOARD AND BRANCH CIRCUIT NUMBER FROM WHICH SERVED ON THE FRONT OF THE DEVICE PLATE WITH PERMANENT POLYESTER TAPE. LOCATE ALL LABELS AT THE BOTTOM OF THE PLATE IN THE SAME LOCATION THROUGHOUT.

3.17 SUSPENDED CEILING SYSTEMS
ALL LAY-IN FIXTURES SHALL BE INDEPENDENTLY SUPPORTED BY TWO #12 SLACK WIRES ATTACHED TO TWO OPPOSITE CORNERS OF THE FIXTURE PER IBC & NEC REQUIREMENTS. THESE WIRES SHALL BE SECURED TO THE STRUCTURAL FRAMING SUCH THAT FAILURE OF THE SUSPENDED CEILING SHALL NOT ALLOW THE FIXTURE TO DROP.

3.18 ONGOING OPERATION
CONDUCT WORK TO MINIMIZE DISRUPTION OF OWNER'S ONGOING OPERATIONS. PROVIDE BARRICADES, NOISE ABATEMENT AND DUST CONTAINMENT MEASURES TO ENSURE THE SAFETY AND COMFORT OF PATRONS, STAFF, AND WORKERS. INTERRUPTIONS OF EXISTING POWER, COMMUNICATIONS OR FIRE ALARM SYSTEMS SHALL BE PERFORMED ONLY AT SUCH TIMES AS DIRECTED BY GENERAL CONTRACTOR / OWNER. OUTAGES SHALL BE MOMENTARY IN NATURE. EACH SUCH OUTAGE (OR OPERATION WHICH MAY POSE RISK OF AN ACCIDENTAL OUTAGE) SHALL BE SCHEDULED 48 HOURS IN ADVANCE.

3.19 FLEXIBLE CONNECTIONS
PROVIDE FLEXIBLE ELECTRICAL CONDUIT AND CONDUCTORS HAVING A SLACK, 90-DEGREE BEND OR LOOP IN ANY PLANE BETWEEN CONNECTIONS AT ALL VIBRATION ISOLATED EQUIPMENT AND THE FIRST ATTACHMENT TO BUILDING STRUCTURE OR CABINETS, PANELS OR BOXES MOUNTED THEREON.

3.20 SEISMIC PROTECTION
- THIS PROJECT IS SUBJECT TO THE SEISMIC BRACING REQUIREMENT OF THE INTERNATIONAL BUILDING CODE, 2012 EDITION. THE FOLLOWING CRITERIA ARE APPLICABLE TO THIS PROJECT:
  SEISMIC USE GROUP: II; SEISMIC CLASS CATEGORY: D; SEISMIC DESIGN CATEGORY: D.
- IT IS RECOMMENDED THAT THE CONTRACTOR ENLIST THE SERVICES OF A QUALIFIED SEISMIC BRACING VENDOR/ SUPPLIER. PROVIDE BRACING FOR IDENTIFIED EQUIPMENT AND SYSTEM.
- ELECTRICAL EQUIPMENT: ELECTRICAL EQUIPMENT SHALL INCLUDE THE FOLLOWING ITEMS TO THE EXTENT REQUIRED ON THE DRAWINGS OR IN OTHER SECTIONS OF THESE SPECIFICATIONS TO BE SEISMICALLY PROTECTED:
  LIGHT FIXTURES, TRANSFORMERS, SWITCHBOARDS, PANELBOARDS.
- ELECTRICAL SYSTEMS: THE FOLLOWING ELECTRICAL SYSTEMS SHALL BE SEISMICALLY PROTECTED IN ACCORDANCE WITH THIS SPECIFICATION:
  LIGHTING, POWER, SECURITY, COMMUNICATIONS AND FIRE ALARM.
- CONDUITS REQUIRING NO SPECIAL SEISMIC RESTRAINTS: SEISMIC RESTRAINTS MAY BE OMITTED FROM ELECTRICAL CONDUIT LESS THAN 2-1/2 INCHES TRADE SIZE. ALL OTHER INTERIOR CONDUIT SHALL BE SEISMICALLY PROTECTED AS SPECIFIED.

3.21 SHORT CIRCUIT AND PROTECTIVE DEVICE COORDINATION STUDY
COMPLETE SHORT CIRCUIT AND PROTECTIVE DEVICE COORDINATION STUDY TO MEET REQUIREMENTS OF NFPA 70.
- PREPARE STUDY PRIOR TO ORDERING DISTRIBUTION EQUIPMENT TO VERIFY EQUIPMENT RATINGS REQUIRED. PROVIDE OWNER WITH MODEL.
- PROVIDE A HARD COPY SINGLE LINE IN A TUBE WITH A CD COPY OF THE MODEL THAT SHALL BE MAGNETICALLY ATTACHED TO THE SIDE OF THE SERVICE ENTRANCE.
- STUDY SHALL ENCOMPASS ALL PORTIONS OF ELECTRICAL DISTRIBUTION SYSTEM FROM NORMAL POWER SOURCE AND/OR STANDBY SOURCES UP TO AND INCLUDING BREAKERS IN SERVICE ENTRANCE SWITCHBOARD, MAIN BREAKER IN SUB-DISTRIBUTION PANELS, MAIN BREAKER IN EACH PANELBOARD.
- CALCULATE SHORT CIRCUIT INTERRUPTING AND, WHEN APPLICABLE, MOMENTARY DUTIES FOR ASSUMED 3-PHASE BOLTED FAULT SHORT CIRCUIT CURRENT AND PHASE TO GROUND FAULT SHORT CIRCUIT CURRENT AT EACH OF THE FOLLOWING:
  * UTILITY SUPPLY BUS
  * AUTOMATIC TRANSFER SWITCH
  * ENGINE GENERATOR
  * LOW-VOLTAGE SWITCHGEAR
  * SWITCHBOARDS
  * MOTOR CONTROL CENTERS
  * DISTRIBUTION PANELBOARDS
  * BRANCH CIRCUIT PANELBOARDS
  * EACH OTHER SIGNIFICANT EQUIPMENT LOCATION THROUGHOUT SYSTEM

3.22 ARC FLASH HAZARDS ANALYSIS STUDIES
- COMPLETE ARC FLASH HAZARDS ANALYSIS STUDY TO MEET REQUIREMENTS OF NFPA 70E.
- PERFORM STUDY WITH AID OF COMPUTER SOFTWARE PROGRAM AND BY A NEVADA LICENSED ELECTRICAL ENGINEER. PROVIDE OWNER WITH MODEL.
- SHALL INCLUDE DETERMINING THE SHORT-CIRCUIT CURRENT AVAILABLE AT THE DESIGNATED POINT OF CONTACT AND INCLUDE PERFORMING THE FOLLOWING TO PROVIDE ADEQUATE PROTECTION:
  * CALCULATE THE FLASH PROTECTION BOUNDARY
  * CALCULATE THE ARC-FLASH INCIDENT ENERGY
  * CONFIRM THE REQUIRED LABELING
  * CONFIRM THE REQUIRED PERSONAL PROTECTIVE EQUIPMENT WITH ARC RATING TO PROVIDE
  * ADEQUATE PROTECTION FOR PERSONNEL WORKING ON OR NEAR-ENERGIZED CONDUCTORS OR COMPONENTS
- PROVIDE NEW AND/OR UPDATED LABELS THROUGHOUT ENTIRE SYSTEM AS REQUIRED.

END OF SECTION 260000

ENGINEERING
742 D STREET
ELKO, NEVADA 89801
TEL: (775) 738 - 3113
FAX: (775) 738 - 6199
WWW.AMENGINEERING.PRO
• ENGINEERING DESIGN & ANALYSIS
• CONSTRUCTION MANAGEMENT
• QA / QC INSPECTIONS
• CONSTRUCTION SURVEYING
• MATERIALS TESTING

CITY OF ELKO
ELKO MOUNTAIN
BOOSTER PUMP STATION
ELECTRICAL SPECIFICATIONS
CITY OF ELKO
ELKO COUNTY
NEVADA

REV	DATE	DESCRIPTION	BY

E0.2

DATE: FEBRUARY 2024
DRAWN BY: DJD
DESIGNED BY: DH
CHECKED BY: KDP
JOB NO.: 24004

PK Electrical, Inc.
ENGINEERING | DESIGN | CONSULTING
681 Sierra Rose Drive, Suite B | Reno, NV 89511 | 775.826.9010
4601 DTC Boulevard, Suite 740 | Denver, CO 80237 | 720.481.3290
pkelectrical.com | PK#24004

K:\2024\24004 - Elko Mtn Booster Station\24004-02 - Specs.dwg,Plot - 22x34,
02/12/2024 09:28 am DDreyer

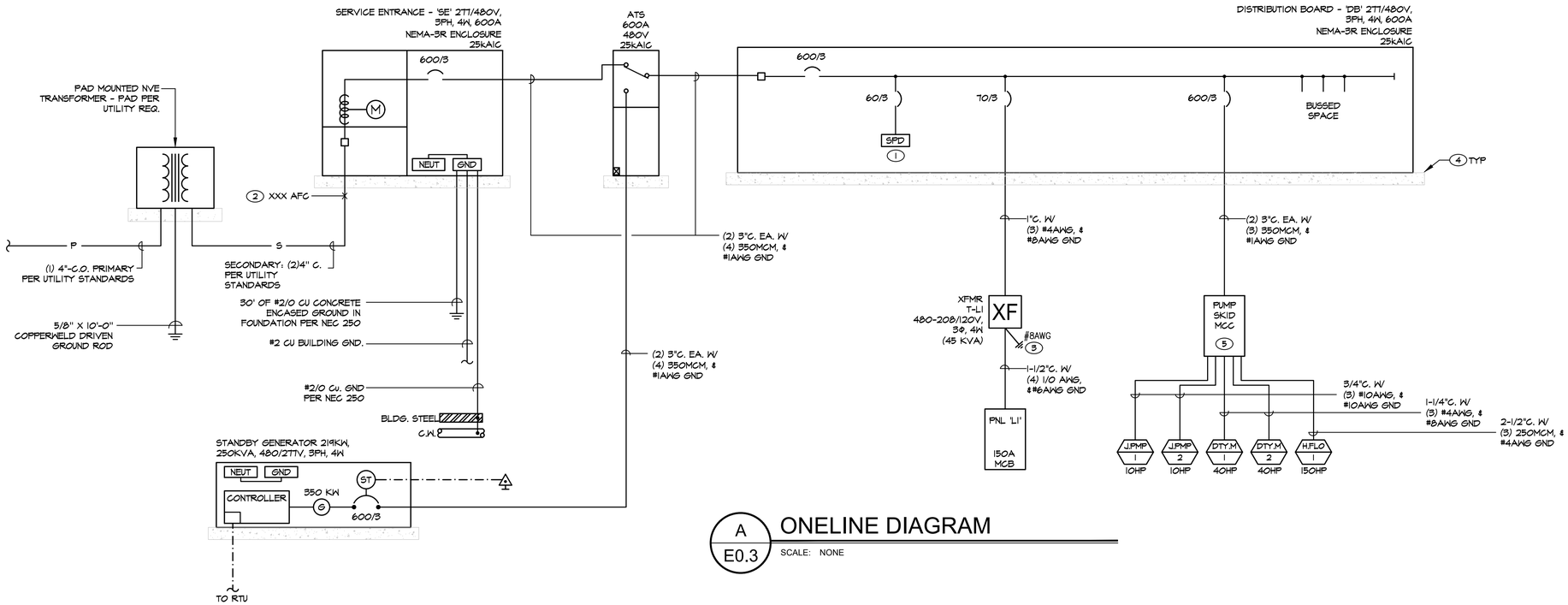

A
E0.3

ONELINE DIAGRAM

SCALE: NONE

GENERAL NOTES

1. PANELBOARD AND BREAKER INTERRUPTING CAPACITIES (AIC) SHALL BE FULLY RATED AS AN ASSEMBLY. SERIES RATING OF BREAKER DEVICES AND EQUIPMENT IS NOT PERMITTED.
2. ALL CONDUCTOR SIZES ARE BASED ON COPPER. ALUMINUM IS NOT PERMITTED.
3. INSTALL NV ENERGY TRANSFORMER PAD, CONDUIT, ETC. PER UTILITY REQUIREMENTS. SEE UTILITY DRAWINGS FOR ALL WORK REQUIRED. ALL WORK SHALL CONFORM WITH THE MOST CURRENT NV ENERGY STANDARD. CONTRACTOR SHALL BE RESPONSIBLE FOR ALL WORK, INCLUDING THAT REQUIRED BY CONTRACTOR IN BID. COORDINATE UTILITY INSTALLATION WITH NV ENERGY.
4. ALL SWITCHBOARDS AND DISTRIBUTION BOARDS SHALL BE FULLY BUSSED.
5. ALL CONTRACTOR PROVIDED EQUIPMENT SHALL COMPLY WITH NV ENERGY SPECIFICATIONS AND REQUIREMENTS.
6. DO NOT SPLICE FEEDER CONDUCTORS UNLESS PRIOR APPROVAL HAS BEEN OBTAINED FROM THE ENGINEER.

SHEET NOTES

1. INTERNALLY MOUNTED SURGE PROTECTIVE DEVICE WITH INTEGRAL DISCONNECT: 240kA PER PHASE, 125kA PER MODE, WITH STATUS INDICATOR LIGHT ON EACH PHASE, AUDIBLE ALARM, TRANSIENT COUNTER AND PUSH-TO-TEST. INSTALL SPD WITHIN MANUFACTURER'S SPECIFIED MAXIMUM LEAD LENGTH.
2. REPRESENTS AVAILABLE SHORT CIRCUIT CURRENT AT SPECIFIC POINT IN SYSTEM.
3. GROUND TRANSFORMERS BACK TO MAIN SYSTEM GROUND ELECTRODE (SEPARATE CONDUIT. MAY NOT BE RUN IN FEEDER).
4. PROVIDE 4-6" CONCRETE EQUIPMENT PAD UNDER EQUIPMENT. COORDINATE CONCRETE PAD REQUIREMENTS WITH CIVIL.
5. VENDOR FURNISHED PACKAGED EQUIPMENT. INSTALLED BY CONTRACTOR.

ENGINEERING
742 D STREET
ELKO, NEVADA 89801
TEL: (775) 738 - 3113
FAX: (775) 738 - 6199
WWW.AMENGINEERING.PRO
• ENGINEERING DESIGN & ANALYSIS
• CONSTRUCTION MANAGEMENT
• QA / QC INSPECTIONS
• CONSTRUCTION SURVEYING
• MATERIALS TESTING

CITY OF ELKO

ELKO MOUNTAIN BOOSTER PUMP STATION ONELINE DIAGRAM

ELKO COUNTY NEVADA

CITY OF ELKO

REV	DATE	DESCRIPTION	BY

E0.3

DATE:	FEBRUARY 2024
DRAWN BY:	DJD
DESIGNED BY:	DH
CHECKED BY:	KDP
JOB NO.:	24004

PK Electrical, Inc.
ENGINEERING | DESIGN | CONSULTING
681 Sierra Rose Drive, Suite B | Reno, NV 89511 | 775.826.9010
4601 DTC Boulevard, Suite 740 | Denver, CO 80237 | 720.481.3290
pkelectrical.com | PK#24004

K:\2024\24004 - Elko Mtn Booster Station\24004-03 - Oneline panel schedules.dwg,Plot - 22x34, 02/12/2024 09:28 am DDreyer

12-Feb-24 PANEL: **L1** LOCATION: **PUMP ROOM**

TYPE	DESCRIPTION	LOAD	BKR	CIR	A	B	C	CIR	BKR	LOAD	DESCRIPTION	TYPE
H	UNIT HEATER	3423	40/3	1	4173			2	20	750	RECEPTACLES	R
H	X	3423	X	3		3963		4	20	540	RECEPTACLES	R
H	X	3423	X	5			3783	6	20	360	RECEPTACLES	R
E	SCADA RTU	1000	20	7	1120			8	15	120	EXTERIOR LIGHTS	L
L	GEN RM LIGHTS	132	15	9		396		10	15	264	PUMP RM LIGHTS	L
L	CHEM RM LIGHTS	33	15	11			141	12	20	108	EXHAUST FAN	M1
H	GEN BLOCK HEATER	1500	20/2	13	2500			14	20	1000	GEN BATTERY CHARGER	E
H	X	1500	X	15		1680		16	20	180	CHEM RM RECEPTACLE	R
	SPARE		20	17			0	18	20		SPARE	
	SPARE		20	19	0			20	20		SPARE	
	SPARE		20	21		0		22	20		SPARE	
	SPARE		20	23			0	24	20		SPARE	
	SPACE			25	0			26			SPACE	
	SPACE			27		0		28			SPACE	
	SPACE			29			0	30			SPACE	
	SPACE			31	0			32			SPACE	
	SPACE			33		0		34			SPACE	
	SPACE			35			0	36			SPACE	
	SPACE			37	0			38			SPACE	
	SPACE			39		0		40			SPACE	
	SPACE			41			0	42			SPACE	
					7793	6039	3924					

COPPER BUS SIZE:	225	**GROUND:**	STANDARD		**NOTES:**
VOLTAGE:	208	**MOUNTING:**	SURFACE		
PHASE:	3	**ENCLOSURE:**	NEMA 1		
WIRE:	4	**# OF 1-POLE CIRCUITS**	42		
LUGS:	MCB	**CONNECTED KVA:**		17.8	
BREAKER AIC RATING:	22K	**CONNECTED AMPS:**		49.3	
NEUTRAL:	100%	**NET KVA:**		17.8	
FEEDER OCPD SIZE:	150	**NET AMPS:**		49.4	

LIGHTING FIXTURE SCHEDULE

LIGHTING FIXTURE CATALOG NUMBERS ARE SERIES TYPE ONLY. PROVIDE TRIMS, BALLASTS, MOUNTING EQUIPMENT, FITTINGS AND LAMPS AS REQUIRED BY THE SPECIFICATIONS AND PROJECT CONDITIONS FOR A COMPLETE INSTALLATION. THIS IS NOT A STANDALONE SCHEDULE AND FIXTURES MUST INCORPORATE ALL WORK INDICATED OR IMPLIED THROUGHOUT THE DRAWINGS AND SPECIFICATIONS.

SUBSTITUTION: DEFINITIONS

- ◉ OR EQUAL = EQUAL OR SUPERIOR TO SPECIFIED IN ALL RESPECTS WILL BE ALLOWED. ENGINEER'S PRE-BID APPROVAL IS NOT REQUIRED. PROPOSED EQUAL FIXTURES ARE SUBJECT TO REVIEW DURING THE STANDARD SUBMITTAL PROCESS.
- ◉ NO EQUAL = PROVIDE SPECIFIED FIXTURE. SUBSTITUTIONS ARE NOT ALLOWED.
- ◉ SUBJECT TO REVIEW = EQUAL OR SUPERIOR TO SPECIFIED IN ALL RESPECTS MAY BE ALLOWED ONLY WITH ENGINEER'S APPROVAL. ALL SUBSTITUTIONS MUST BE SUBMITTED AS REQUIRED BY SPECIFICATIONS AND ACCOMPANIED WITH POINT BY POINT LIGHTING CALCULATIONS. DETERMINATION OF EQUAL IS ENGINEER'S SOLE DISCRETION.

TYPE	SYMBOL	DESCRIPTION AND MANUFACTURER
L1 33		LED, 4FT SURFACE MOUNTED STRIP FIXTURE WITH FROSTED ACRYLIC ROUNDED LENS. DAMP LOCATION LISTED, PROVIDE WITH 0-10V DIMMING DRIVER. 4000K COLOR TEMPERATURE, 5000 LUMEN. LAMP: LED 4000K/5000LM VOLTAGE: MVOLT MANUFACTURER: HE WILLIAMS #T5R-4-L50-840-FP-DIM-120 SUBSTITUTIONS: ◉ OR EQUAL ◯ SUBJECT TO REVIEW ◯ NO EQUAL
L1X 33		SAME AS LIGHTING FIXTURE TYPE 'L1' WITH 90-MINUTE EMERGENCY BATTERY. LAMP: LED 4000K/5000LM VOLTAGE: MVOLT MANUFACTURER: HE WILLIAMS #T5R-4-L50-840-EM/10WLP-FP-DIM-120 SUBSTITUTIONS: ◉ OR EQUAL ◯ SUBJECT TO REVIEW ◯ NO EQUAL
L2 24		LED, WALL PACK FIXTURE WITH FULL CUTOFF, 4000K COLOR, 120-277V, 24W. LAMP: LED VOLTAGE: 120-277OV MANUFACTURER: LITHONIA LIGHTING WPXI LED P2 40K MVOLT DDBXD M4 SUBSTITUTIONS: ◉ OR EQUAL ◯ SUBJECT TO REVIEW ◯ NO EQUAL
L2X 24		SAME AS LIGHTING FIXTURE TYPE 'L2' WITH 90-MINUTE EMERGENCY BATTERY. LAMP: LED VOLTAGE: 120-277V MANUFACTURER: LITHONIA LIGHTING WPXI LED P2 40K MVOLT DDBXD M4 EM SUBSTITUTIONS: ◉ OR EQUAL ◯ SUBJECT TO REVIEW ◯ NO EQUAL
XI 0.71		LED EMERGENCY EXIT SIGN, 120/277V, RED EXIT WITH BACKUP BATTERY, WHITE. LAMP: LED VOLTAGE: 120/277V MANUFACTURER: LITHONIA LIGHTING LQM S W 3 R 120/277 EL N M6 SUBSTITUTIONS: ◉ OR EQUAL ◯ SUBJECT TO REVIEW ◯ NO EQUAL

ENGINEERING
742 D STREET
ELKO, NEVADA 89801
TEL: (775) 738 - 3113
FAX: (775) 738 - 6199
WWW.AMENGINEERING.PRO
• ENGINEERING DESIGN & ANALYSIS
• CONSTRUCTION MANAGEMENT
• QA / QC INSPECTIONS
• CONSTRUCTION SURVEYING
• MATERIALS TESTING

CITY OF ELKO

ELKO MOUNTAIN
BOOSTER PUMP STATION
LIGHTING FIXTURE SCHEDULE

ELKO COUNTY NEVADA

CITY OF ELKO

REV	DATE	DESCRIPTION	BY

E0.4

DATE:	FEBRUARY 2024
DRAWN BY:	DJD
DESIGNED BY:	DH
CHECKED BY:	KDP
JOB NO.:	24004

PK Electrical, Inc.
ENGINEERING | DESIGN | CONSULTING
681 Sierra Rose Drive, Suite B | Reno, NV 89511 | 775.826.9010
4601 DTC Boulevard, Suite 740 | Denver, CO 80237 | 720.481.3290
pkelectrical.com | PK#24004

K:\2024\24004 - Elko Mtn Booster Station\24004-04 - Fixture Schedule.dwg,Plot - 22x34,
02/12/2024 09:28 am DDreyer

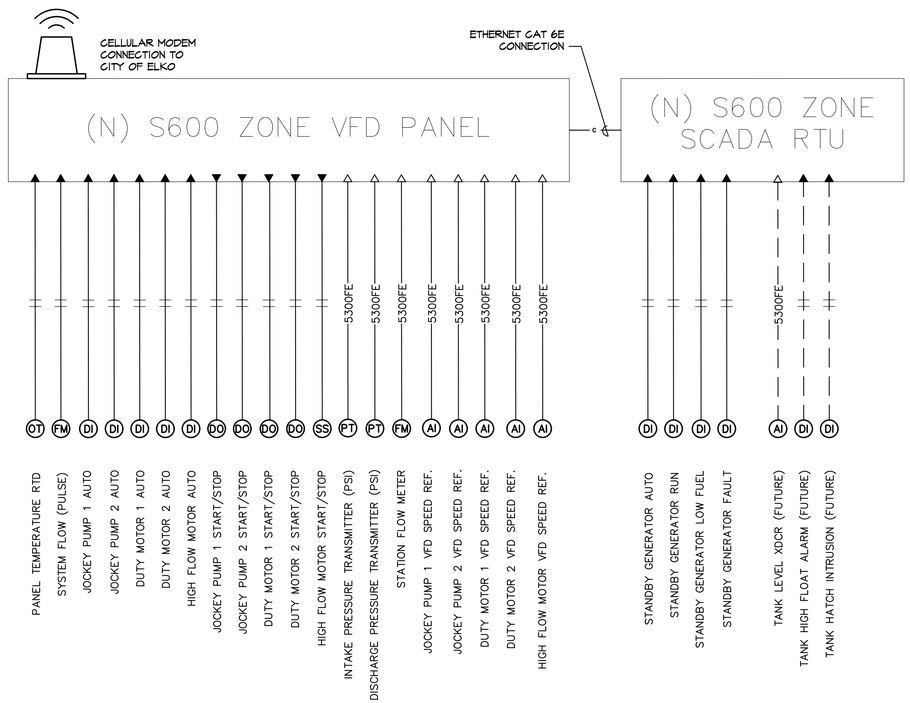

RTU CONTROL WIRING NOTES

1. ALL CONTROL WIRING SHALL BE LABELED WITH PRINTED HEAT SHRINK IDENTIFICATION LABELS (COORDINATE IDENTIFICATION NOMENCLATURE WITH CITY OF ELKO) ON BOTH THE RTU AND EQUIPMENT/DEVICE SIDE OF THE CABLING.
2. ALL CONTROL WIRING SHALL BE INSTALLED IN CONDUIT. 3/4" MINIMUM, UNLESS NOTED OTHERWISE.

RTU LEGEND

△	= ANALOG INPUT
▲	= DISCRETE INPUT
▼	= DISCRETE OUTPUT
B	= 24VDC – BLUE CONDUCTOR
Y	= 120VAC – YELLOW CONDUCTOR

A / E0.5 REMOTE TERMINAL UNIT - BLOCK DIAGRAM

SCALE: NONE

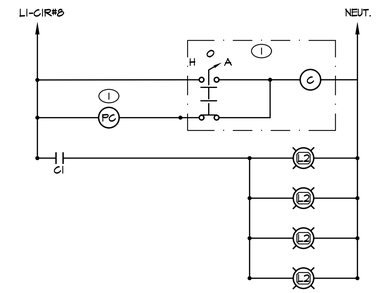

DIAGRAM NOTES

1. PROVIDE NEMA-1 LIGHTING CONTACTOR WITH HAND, OFF, AUTOMATIC SELECTOR SWITCH. EXTERIOR LIGHTING SHALL BE PHOTOCELL CONTROLLED, EACH LIGHTING FIXTURE SHALL BE EQUIPPED WITH AN INTEGRAL MOTION SENSOR (REFER TO LIGHTING FIXTURE SCHEDULE).

B / E0.5 EXT. LIGHTING CONTROL DIAGRAM

SCALE: NONE

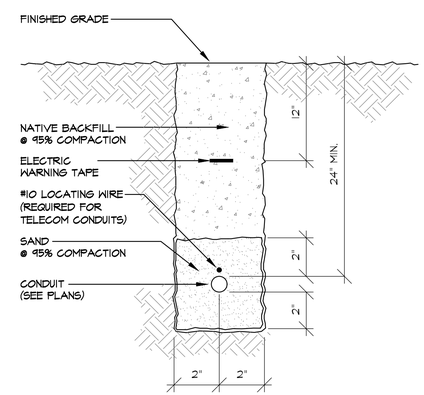

C / E0.5 TYPICAL 4" X 18" TRENCH DETAIL

SCALE: NONE TR-007

PK Electrical, Inc.
ENGINEERING | DESIGN | CONSULTING
681 Sierra Rose Drive, Suite B | Reno, NV 89511 | 775.826.9010
4601 DTC Boulevard, Suite 740 | Denver, CO 80237 | 720.481.3290
pkelectrical.com | PKE24004

ENGINEERING
742 D STREET
ELKO, NEVADA 89801
TEL: (775) 738 - 3113
FAX: (775) 738 - 6199
WWW.AMENGINEERING.PRO
• ENGINEERING DESIGN & ANALYSIS
• CONSTRUCTION MANAGEMENT
• QA / QC INSPECTIONS
• CONSTRUCTION SURVEYING
• MATERIALS TESTING

CITY OF ELKO

ELKO MOUNTAIN BOOSTER PUMP STATION DETAILS

ELKO COUNTY NEVADA

CITY OF ELKO

REV	DATE	DESCRIPTION	BY

E0.5

DATE:	FEBRUARY 2024
DRAWN BY:	DJD
DESIGNED BY:	DH
CHECKED BY:	KDP
JOB NO.:	24004

K:\2024\24004 – Elko Mtn Booster Station\24004-05 – Details.dwg,Plot – 22x34 E0.5,
02/12/2024 09:28 am DDreyer

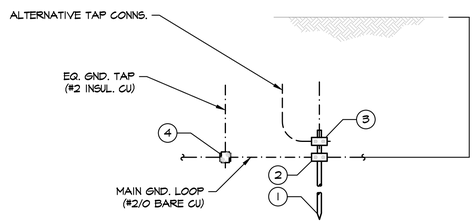

BILL OF MATERIALS		
NO.	DESCRIPTION	QTY
1	GROUND ROD, 3/4" DIA. x 10', COPPER-CLAD STEEL	1
2	GROUND ROD CONNECTOR (5/8"-3/4", 2/0 SOL-250) BURNDY #GAR6429 OR EQUAL.	1
3	GROUND ROD CONNECTOR (5/8"-3/4", #4 SOL-2/0) BURNDY #GAR6426 OR EQUAL.	1
4	GROUND CABLE CONNECTOR (#2/0-250 TO #4-#2/0) BURNDY #GX2926 OR EQUAL.	1

A / E0.6 GROUND ROD INSTALLATION DETAIL

SCALE: NONE

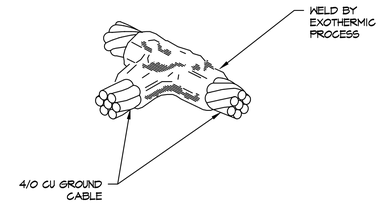

B / E0.6 GROUND RING CONNECTION DETAIL

SCALE: NONE

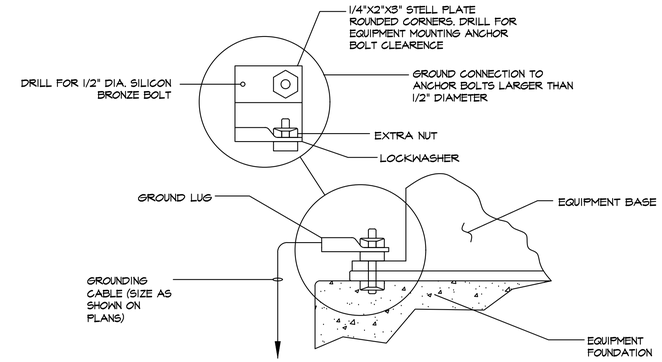

NOTE:

GROUND LUG SHALL BE BOLTED TO THE ANCHOR WITH A SECOND NUT AND LOCKWASHER. WHEN THE ANCHOR BOLT IS TOO LARGE FOR THE GROUND LUG A STEEL PLATE SHALL BE PROVIDED. DRILLED FOR ANCHOR BOLT CLEARANCE AND INSTALLED AS SHOWN WITH GROUND CONNECTOR BOLTED TO THE STEEL PLATE WITH 1/2" SILICONE BRONZE BOLT NUT AND FLAT WASHER.

C / E0.6 EQUIPMENT GROUNDING DETAIL

SCALE: NONE

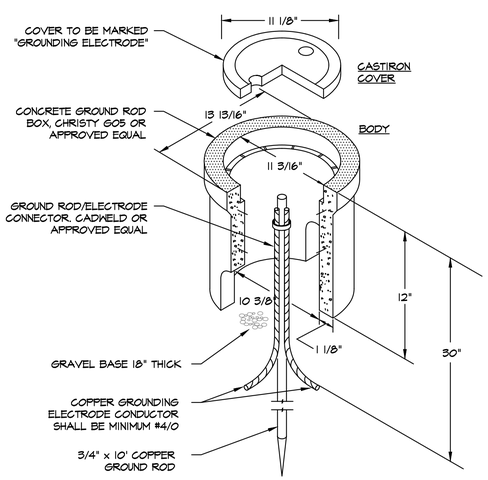

D / E0.6 CONCRETE GROUND ROD INSPECTION DETAIL

SCALE: NONE

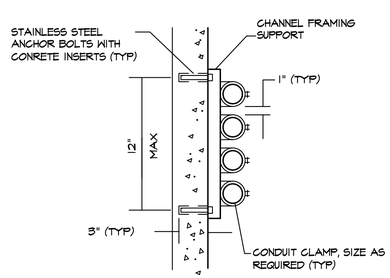

WALL MOUNTED

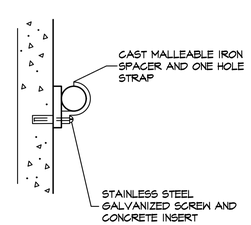

CEILING OR WALL
MOUNTED

E / E0.6 CONDUIT MOUNTING DETAILS

SCALE: NONE

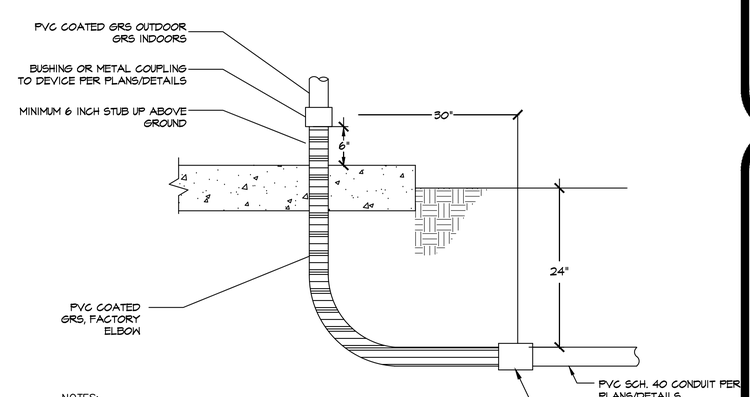

NOTES:

1. ALL DIMENSIONS SHOWN ARE MINIMUM.
2. PROVIDE 6 INCH COVER OF CONCRETE WITHIN 2 FEET OF ALL DRIVABLE AREAS PER DETAILS AND PLAN.

F / E0.6 TYPICAL CONDUIT STUB-UP DETAIL

SCALE: NONE

PK Electrical, Inc.
ENGINEERING | DESIGN | CONSULTING
681 Sierra Rose Drive, Suite B | Reno, NV 89511 | 775.826.9010
4601 DTC Boulevard, Suite 740 | Denver, CO 80237 | 720.481.3290
pkelectrical.com | PK#24004

AMEngineering
ENGINEERING
742 D STREET
ELKO, NEVADA 89801
TEL: (775) 738 - 3113
FAX: (775) 738 - 6199
WWW.AMENGINEERING.PRO
• ENGINEERING DESIGN & ANALYSIS
• CONSTRUCTION MANAGEMENT
• QA / QC INSPECTIONS
• CONSTRUCTION SURVEYING
• MATERIALS TESTING

CITY OF ELKO

ELKO MOUNTAIN
BOOSTER PUMP STATION
DETAILS

ELKO COUNTY NEVADA

CITY OF ELKO

REV	DATE	DESCRIPTION	BY

E0.5

DATE:	FEBRUARY 2024
DRAWN BY:	DJD
DESIGNED BY:	DH
CHECKED BY:	KDP
JOB NO.:	24004

K:\2024\24004 - Elko Mtn Booster Station\24004-05 - Details.dwg,E0.6,
02/12/2024 08:28 am DDreyer

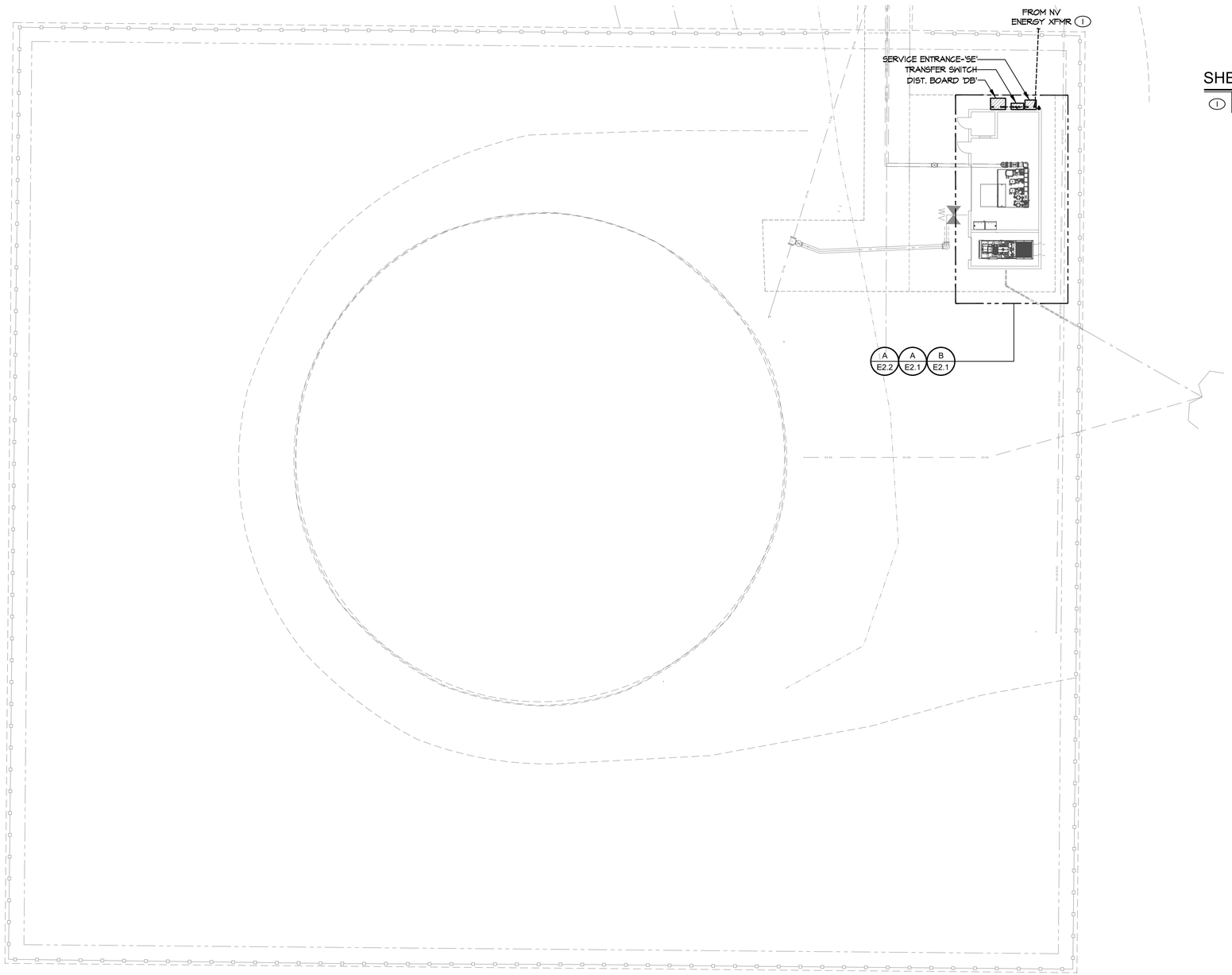

A
E1.1
ELECTRICAL SITE PLAN
SCALE: 1/16" = 1'-0"

GENERAL NOTES

1. CONDUIT TRENCHES PER DETAIL "B" SHEET E0.5.
2. CONDUIT ROUTING IS SHOWN DIAGRAMMATICALLY. CONTRACTOR SHALL INSTALL PULL POINTS WHERE REQUIRED FOR PULLING TENSION AND MAINTAINING LESS THAN (4) 90 DEGREE BENDS.
3. ALL CONDUITS SHALL BE ROUTED IN SUCH A WAY AS TO AVOID TRIP HAZARDS AND MAINTAIN CLEARANCE REQUIREMENTS.

SHEET NOTES

1. REFER TO UTILITY DRAWINGS FOR LOCATION AND INSTALLATION REQUIREMENTS.

ENGINEERING
742 D STREET
ELKO, NEVADA 89801
TEL: (775) 738 - 3113
FAX: (775) 738 - 6199
WWW.AMENGINEERING.PRO
• ENGINEERING DESIGN & ANALYSIS
• CONSTRUCTION MANAGEMENT
• QA / QC INSPECTIONS
• CONSTRUCTION SURVEYING
• MATERIALS TESTING

CITY OF ELKO

ELKO MOUNTAIN BOOSTER PUMP STATION ELECTRICAL SITE PLAN

ELKO COUNTY NEVADA

CITY OF ELKO

REV	DATE	DESCRIPTION	BY

E1.1

DATE:	FEBRUARY 2024
DRAWN BY:	DJD
DESIGNED BY:	DH
CHECKED BY:	KDP
JOB NO.:	24004

PK Electrical, Inc.
ENGINEERING | DESIGN | CONSULTING
681 Sierra Rose Drive, Suite B | Reno, NV 89511 | 775.826.9010
4601 DTC Boulevard, Suite 740 | Denver, CO 80237 | 720.481.3290
pkelectrical.com | PK#24004

K:\2024\24004 - Elko Mtn Booster Station\24004-11 - Site.dwg,Plot - 22x34,
02/12/2024 09:29 am DDreyer

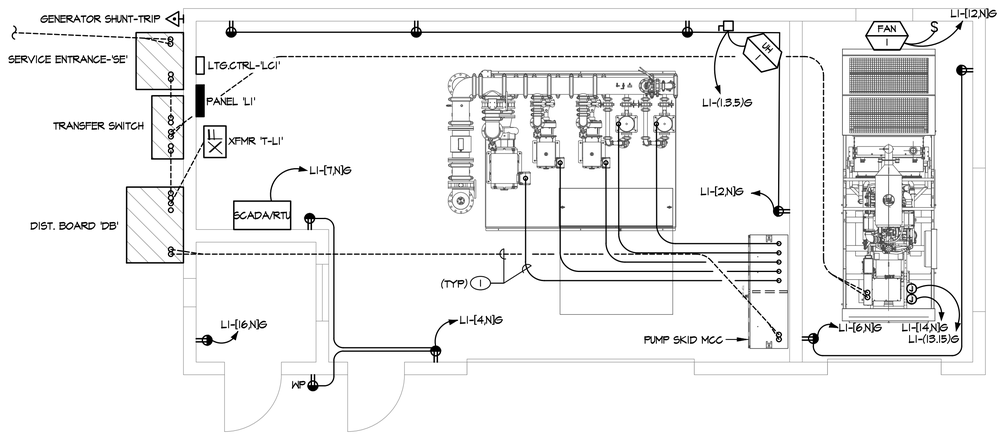

B
E2.1

POWER PLAN

SCALE: 1/4" = 1'-0"

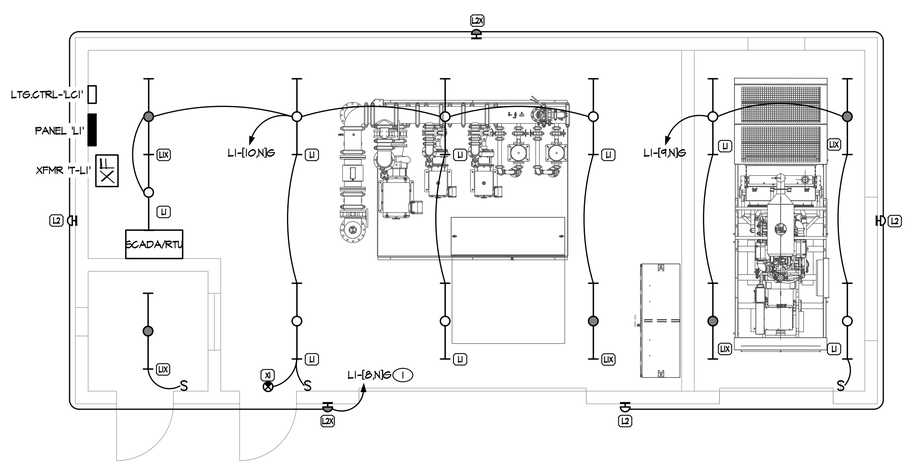

A
E2.1

LIGHTING PLAN

SCALE: 1/4" = 1'-0"

POWER GENERAL NOTES

1. CONTRACTOR SHALL OBTAIN ALL WIRING DIAGRAMS AND CUT SHEETS ASSOCIATED WITH MECHANICAL EQUIPMENT. CONTROL WIRING SHALL BE PROVIDED AND INSTALLED IN ACCORDANCE WITH EQUIPMENT CUT SHEETS AND SHOP DRAWINGS. ANY CONDUIT AND CONDUCTORS REQUIRED FOR CONTROL WIRING SHALL BE PROVIDED AND INSTALLED BY ELECTRICAL CONTRACTOR.
2. LOCATE ALL DISCONNECTS, STARTERS AND DRIVES WHERE ACCESSIBLE. PROVIDE ACCESS AND CLEARANCE AS REQUIRED PER NEC. PROVIDE ACCESS HATCH IF LOCATED ABOVE HARD LID CEILING.
3. REFER TO CIVIL / MECHANICAL DRAWINGS FOR EQUIPMENT MODEL NUMBERS AND SPECIFIC ELECTRICAL REQUIREMENTS, OPTIONS AND ACCESSORIES.
4. INFORMATION ON CIVIL / MECHANICAL DRAWINGS SUPERSEDE INFORMATION SHOWN ON ELECTRICAL DRAWINGS. ELECTRICAL CONTRACTOR SHALL COORDINATE WITH MECHANICAL DRAWINGS PRIOR TO ROUGH-IN.
5. ELECTRICAL CONTRACTOR IS RESPONSIBLE FOR VERIFYING ELECTRICAL REQUIREMENTS FOR FINAL MECHANICAL EQUIPMENT INSTALLED. SHOULD THERE BE ANY DISCREPANCY BETWEEN ACTUAL EQUIPMENT INSTALLED AND ELECTRICAL OR MECHANICAL DRAWINGS, CONTRACTOR SHALL NOTIFY ENGINEER IMMEDIATELY FOR CLARIFICATION AND FURTHER DIRECTION.

POWER SHEET NOTES

1. REFER TO ONELINE DIAGRAM FOR CONDUIT AND CONDUCTOR REQUIREMENTS.

LIGHTING GENERAL NOTES

1. CONDUIT FOR EXTERIOR BUILDING MOUNTED EQUIPMENT AND LIGHTING FIXTURES IS NOT PERMITTED TO BE RUN EXPOSED ON THE EXTERIOR OF THE BUILDING. ROUTE ALL CONDUITS CONCEALED WITHIN BUILDING CONSTRUCTION OR ON THE INTERIOR OF THE BUILDING.
2. PROVIDE AN UN-SWITCHED CONSTANT HOT CIRCUIT TO ALL EXIT LIGHTING FIXTURES OR LIGHTING FIXTURES DESIGNATED AS 'EMERGENCY'.
3. ANY CONDUIT PENETRATIONS SHALL BE SEALED WITH APPROVED SEALANTS MATCHING THE FIRE OR WEATHER RATING OF THE SURFACE THAT IS PENETRATED.

LIGHTING SHEET NOTES

1. ROUTE EXTERIOR LIGHTING CIRCUIT THROUGH LIGHTING CONTACTOR 'LC1'. REFER TO DIAGRAM DETAIL 'B' SHEET E0.5 FOR ADDITIONAL INFORMATION AND CONNECTION REQUIREMENTS.

ENGINEERING
742 D STREET
ELKO, NEVADA 89801
TEL: (775) 738 - 3113
FAX: (775) 738 - 6199
WWW.AMENGINEERING.PRO
• ENGINEERING DESIGN & ANALYSIS
• CONSTRUCTION MANAGEMENT
• QA / QC INSPECTIONS
• CONSTRUCTION SURVEYING
• MATERIALS TESTING

CITY OF ELKO

ELKO MOUNTAIN BOOSTER PUMP STATION LIGHTING AND POWER PLANS

ELKO COUNTY — NEVADA

CITY OF ELKO

REV	DATE	DESCRIPTION	BY

E2.1

DATE:	FEBRUARY 2024
DRAWN BY:	DJD
DESIGNED BY:	DH
CHECKED BY:	KDP
JOB NO.:	24004

PK Electrical, Inc.
ENGINEERING | DESIGN | CONSULTING
681 Sierra Rose Drive, Suite B | Reno, NV 89511 | 775.826.9010
4601 DTC Boulevard, Suite 740 | Denver, CO 80237 | 720.481.3290
pkelectrical.com | PK#24004

K:\2024\24004 – Elko Mtn Booster Station\24004-21 – Pwr & Ltg.dwgPlot – 22x34,
02/12/2024 08:29 am DDreyer

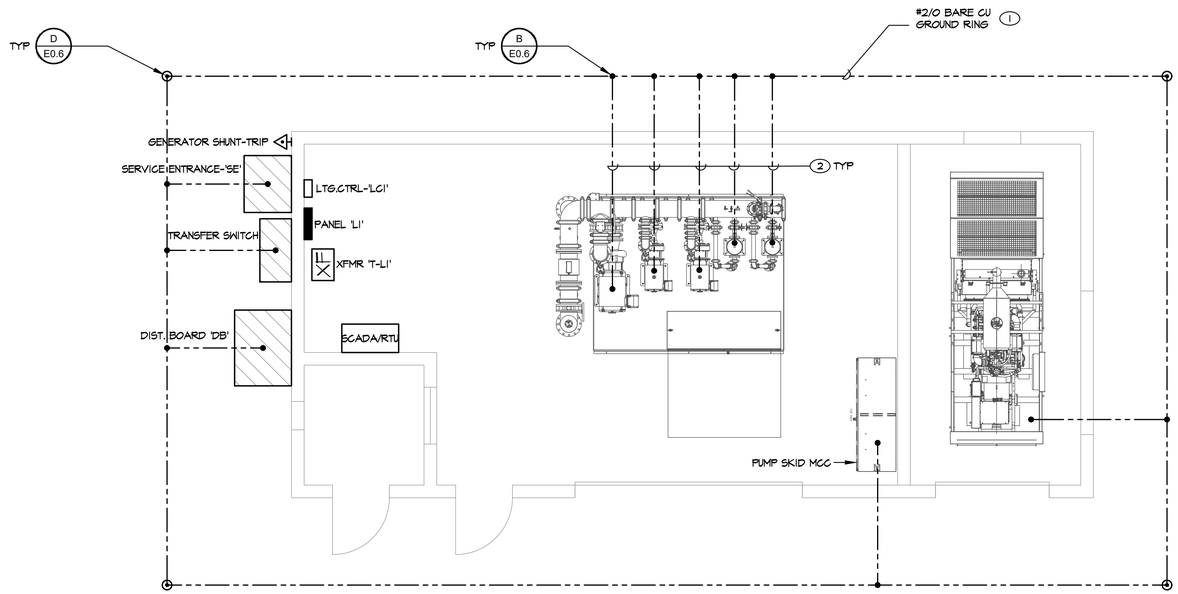

A
E2.2
GROUNDING PLAN
SCALE: 1/4" = 1'-0"

GENERAL NOTES

1. GROUND AND BOND ALL EQUIPMENT AND ENCLOSURES PER MANUFACTURER REQUIREMENTS AND NEC 250.
2. GROUND AND BOND ALL MOTOR FRAMES TO THE GROUNDING RING.
3. ALL METALLIC ENCLOSURES INCLUDING RAILINGS, FENCES OR OTHER METAL THAT PERSONNEL MAY COME IN CONTACT WITH SHALL BE EFFECTIVELY GROUNDED.
4. BARE GROUND CONNECTIONS EXPOSED TO THE ATMOSPHERE SHALL BE COVERED WITH GLYPTAL OR EQUIVALENT.

SHEET NOTES

1. #2/0 BARE GROUND RING, MINIMUM 30" BELOW GRADE.
2. REFERENCE ELECTRICAL ONELINE FOR GROUND CONDUCTOR SIZE.

ENGINEERING
742 D STREET
ELKO, NEVADA 89801
TEL: (775) 738 - 3113
FAX: (775) 738 - 6199
WWW.AMENGINEERING.PRO
• ENGINEERING DESIGN & ANALYSIS
• CONSTRUCTION MANAGEMENT
• QA / QC INSPECTIONS
• CONSTRUCTION SURVEYING
• MATERIALS TESTING

CITY OF ELKO
ELKO COUNTY
ELKO MOUNTAIN BOOSTER PUMP STATION GROUNDING PLAN
CITY OF ELKO
ELKO COUNTY
NEVADA

REV	DATE	DESCRIPTION	BY

E2.2

DATE:	FEBRUARY 2024
DRAWN BY:	DJD
DESIGNED BY:	DH
CHECKED BY:	KDP
JOB NO.:	24004

PK Electrical, Inc.
ENGINEERING | DESIGN | CONSULTING
681 Sierra Rose Drive, Suite B | Reno, NV 89511 | 775.826.9010
4601 DTC Boulevard, Suite 740 | Denver, CO 80237 | 720.481.3290
pkelectrical.com | PK#24004

K:\2024\24004 - Elko Mtn Booster Station\24004-22 - Grounding Plan.dwg,Plot - 22x34,
02/12/2024 09:29 am DDreyer