CITY OF ELKO
Planning Department

Website: www.elkocitynv.gov
Email: planning@elkocitynv.gov

1751 College Avenue · Elko, Nevada 89801 · (775) 777-7160 · Fax (775) 777-7219

PUBLIC MEETING NOTICE

The City of Elko Planning Commission will meet in a regular session on Tuesday, December 7, 2021 beginning at 5:30 P.M., P.S.T. in the Council Chambers at Elko City Hall, 1751 College Avenue, Elko, Nevada, and by utilizing **GoToMeeting.com.**

The public can view or participate in the virtual meeting on a computer, laptop, tablet or smart phone at: https://global.gotomeeting.com/join/303168685. You can also dial in using your phone at **+1 (408) 650-3123.** The **Access Code** for this meeting is **303-168-685.** Comments can also be emailed to planning@elkocitynv.gov.

Attached with this notice is the agenda for said meeting of the Commission. In accordance with NRS 241.020, the public notice and agenda were posted on the City of Elko Website at http://www.elkocitynv.gov/, the State of Nevada's Public Notice Website at https://notice.nv.gov, and in the following locations:

ELKO CITY HALL – 1751 College Avenue, Elko, NV 89801
Date/Time Posted: December 1, 2021 2:00 p.m.

Posted by: Shelby Knopp, Administrative Assistant _____
Name Title Signature

The public may contact Shelby Knopp by phone at (775) 777-7160 or by email at sknopp@elkocitynv.gov to request supporting material for the meeting described herein. The agenda and supporting material is also available at Elko City Hall, 1751 College Avenue, Elko, NV, or on the City website at www.elkocity.com.

Dated this 1st day of December, 2021.

NOTICE TO PERSONS WITH DISABILITIES

Members of the public who are disabled and require special accommodations or assistance at the meeting are requested to notify the City of Elko Planning Department, 1751 College Avenue, Elko, Nevada, 89801 or by calling (775) 777-7160.

Cathy Laughlin, City Planner

CITY OF ELKO
PLANNING COMMISSION
REGULAR MEETING AGENDA
5:30 P.M., P.S.T., TUESDAY, DECEMBER 7, 2021
ELKO CITY HALL, COUNCIL CHAMBERS,
1751 COLLEGE AVENUE, ELKO, NEVADA
HTTPS://GLOBAL.GOTOMEETING.COM/JOIN/303168685

CALL TO ORDER

The Agenda for this meeting of the Elko City Planning Commission has been properly posted for this date and time in accordance with NRS requirements.

ROLL CALL

PLEDGE OF ALLEGIANCE

COMMENTS BY THE GENERAL PUBLIC

Pursuant to N.R.S. 241, this time is devoted to comments by the public, if any, and discussion of those comments. No action may be taken upon a matter raised under this item on the agenda until the matter itself has been specifically included on a successive agenda and identified as an item for possible action. **ACTION WILL NOT BE TAKEN**

APPROVAL OF MINUTES

November 2, 2021 – Regular Meeting **FOR POSSIBLE ACTION**

I. PRESENTATIONS

A. Presentation of a Plaque of Appreciation to Tera Hooiman for her service on the Elko City Planning Commission. **INFORMATION ONLY – NON ACTION ITEM**

II. NEW BUSINESS

A. PUBLIC HEARING

1. Review, consideration and possible recommendation to City Council for Rezone No. 1-21, filed by Dominion Engineering on behalf of McDonald's USA, Inc., for a change in zoning from R (Single Family and Multiple Family Residential) to C (General Commercial) Zoning District, approximately 8,812 square feet of property, to allow for a proposed redevelopment of the property, and matters related thereto. **FOR POSSIBLE ACTION**

   The existing parcel is currently two different zoning districts. This application is requesting to create one zoning district on the parcel consistent with the proposed redevelopment of the parcel.

2. Review, consideration and possible recommendation to City Council for Rezone No. 2-21, filed by Walsh Properties LLC., for a change in zoning from GI (General Industrial) to C (General Commercial) Zoning District, approximately 18,015 square feet, to allow for a proposed commercial retail land use of the property, and matters related thereto. **FOR POSSIBLE ACTION**

   The property has recently changed ownership and the new owner is proposing a commercial land use.

B. MISCELLANEOUS ITEMS, PETITIONS, AND COMMUNICATIONS

1. Review, consideration and possible approval of Final Map No. 5-21, filed by Bailey and Associates, LLC for the development of a subdivision entitled Cedar Estates Phase 3 involving the proposed division of approximately 7.31 acres of property into 34 lots for residential development within the RMH (Residential Mobile Home) Zoning District, and matters related thereto. **FOR POSSIBLE ACTION**

   Subject property is located at the northern terminus of both Primrose Lane and Daisy Drive. (APN 001-926-111)

2. Review, consideration and possible recommendation to City Council for Revocable Permit No. 5-21, filed by Walsh Properties LLC, to occupy a portion of Silver Street right-of-way to accommodate existing off-street parking, landscaping and sign, located generally south of the intersection of Silver Street and 2nd Street, and matters related thereto. **FOR POSSIBLE ACTION**

   The applicant is requesting a change of use for the parcel which will require the property be brought from legal non-conforming to conforming. A revocable license agreement to occupy the right-of-way for the existing parking and sign is required.

3. Special election of Vice Chairperson for the remainder of 2021, and matters related thereto. **FOR POSSIBLE ACTION**

   Pursuant to Section 3-4-1 (E) of the City Code, vacancies occurring otherwise than through the expiration of term shall be filled for the unexpired term. The planning commission appointed Ms. Tera Hooiman Vice Chairman of the Planning Commission at their special election October 5, 2021 and received her letter of resignation on November 17, 2021.

III. REPORTS

A. Summary of City Council Actions.

B. Summary of Redevelopment Agency Actions.

C. Professional articles, publications, etc.

1. Zoning Bulletin

D. Miscellaneous Elko County

E. Training

COMMENTS BY THE GENERAL PUBLIC

Pursuant to N.R.S. 241, this time is devoted to comments by the public, if any, and discussion of those comments. No action may be taken upon a matter raised under this item on the agenda until the matter itself has been specifically included on a successive agenda and identified as an item for possible action. **ACTION WILL NOT BE TAKEN**

NOTE: The Chairman or Vice Chairman reserves the right to change the order of the agenda and if the agenda is not completed, to recess the meeting and continue on another specified date and time. Additionally, the Planning Commission reserves the right to combine two or more agenda items, and/or remove an item from the agenda, or delay discussion relating to an item on the agenda at any time.

ADJOURNMENT

Respectfully submitted,

Cathy Laughlin
City Planner

CITY OF ELKO
PLANNING COMMISSION
REGULAR MEETING MINUTES
5:30 P.M., P.D.S.T., TUESDAY, NOVEMBER 2, 2021
ELKO CITY HALL, COUNCIL CHAMBERS,
1751 COLLEGE AVENUE, ELKO, NEVADA
HTTPS://GLOBAL.GOTOMEETING.COM/JOIN/478986805

CALL TO ORDER

Jeff Dalling, Chairman of the City of Elko Planning Commission, called the meeting to order at 5:30 p.m.

ROLL CALL

Present: **Jeff Dalling**
Mercedes Mendive
Tera Hooiman
John Anderson
Stefan Beck
Gratton Miller
John Lemich

City Staff Present: **Cathy Laughlin, City Planner**
Michele Rambo, Development Manager
Bob Thibault, Civil Engineer
Jamie Winrod, Fire Marshal
Shelby Knopp, Administrative Assistant

PLEDGE OF ALLEGIANCE

COMMENTS BY THE GENERAL PUBLIC

There were no public comments made at this time.

APPROVAL OF MINUTES

October 5, 2021 – Regular Meeting **FOR POSSIBLE ACTION**

*****Motion: Approve the October 5, 2021 Planning Commission Meeting Minutes as presented.**

Moved by Commissioner Tera Hooiman, Seconded by Commissioner Gratton Miller.

Motion passed unanimously. (7-0)

I. NEW BUSINESS

DRAFT

A. PUBLIC HEARING

1. Review, consideration, and possible action on Conditional Use Permit No. 4-21, filed by JRW & Associates on behalf of the Church of Jesus Christ of Latter Day Saints, which would allow for the new Temple development within the C- General Commercial zoning district and abutting a residential zone, and matters related thereto. **FOR POSSIBLE ACTION**

   A conditional use permit is required for every new development on a lot or parcel in the C-General Commercial zoning district which abuts a residential zoning district.

Johnny Watson, 1152 Bond Avenue, Rexburg, ID, thanked staff for being so helpful and getting them on the agenda today. The parcel is located on the corner of Ruby Vista Drive. It is zoned Commercial General. There is a golf course on one side and a residential neighborhood just up the hill, which is what is driving their Conditional Use Permit. He didn't believe a religious facility was one of the permitted uses in the Commercial Zone without a Conditional Use Permit. The Master plan shows the area as Commercial Highway, so the use seems to be consistent with the long term plan for that area. As stated in the application, the quiet, reverent nature of the religious facility makes it a nice transition between the Commercial and Residential. Hopefully the neighbors will agree with that. The Temple operates Monday thru Saturday. There is typically no Sunday use. The small building on the property is an ancillary building. What's located in that building is the non-patron waiting area, a small clothing distribution center, and the office for the facilities management. It is a small single story 2,200 sq. ft. structure. The Temple itself is also pretty small, compared to what you would see in the Salt Lake Valley. The main level is just under 9,000 sq. ft. This particular model has been less than 10,000 sq. ft. It is one story, the main elevation varies from 28 feet to 22 feet, with the spire being from 95' to 110', depending on the specific design of the spire. This rendering was released by the owner a few months ago as the approved design for the Elko facility. They are showing about 160 parking spaces based on the City Ordinance. Roughly 140 spaces are required, depending on how you calculate the interior spaces. Mr. Watson said he was generous on the gross square footage calculations. There are two instruction rooms that alternate seating for about 40 people. The 160 provided parking spaces far exceeds what the owner anticipates the need for the facility. A schematic landscape design has been provided, but it will be more defined.

Cathy Laughlin, City Planner, went over the City of Elko Staff Report dated October 12, 2021. Staff recommended conditional approval with the findings and conditions listed in the Staff Report.

Michele Rambo, Development Manager, stated that she had five conditions, which were listed in the Staff Report. Two are typical conditions, the parcels must be merged and recorded, and the driveway at the southwest corner be limited to right-in/right-out. The other conditions are related to permits through the State and Low Impact Development.

Bob Thibault, Civil Engineer, recommended approval as presented by staff.

Jamie Winrod, Fire Marshal, had no comments or concerns and recommended approval.

Ms. Laughlin stated that the City Manager's Office recommended approval as presented by staff.

DRAFT

Commissioner John Lemich asked about the fencing along the golf course. He asked if there was going to be any additional fencing.

Ms. Laughlin explained that the City Code only requires separation between residential zones and this property. They are only required a screen wall between their property and the residential zone. The Golf Course is not zoned residential, or they would be required to provide a screen wall along that property line as well. Ms. Laughlin wasn't sure what they were proposing.

Mr. Watson explained that there would be fencing around the entire property. They will be providing a block wall, or visually screening, along the residential zone. Typically, there is fencing around the entire property for security.

Chairman Jeff Dalling asked what kind of fencing is typically provided.

Mr. Watson said it was typically a six-foot steel, wrought iron fence.

Commissioner Tera Hooiman asked where the right-in/right-out driveway was going to be.

Ms. Laughlin explained that it was the driveway located on the southwest corner.

Commissioner Lemich asked if there were only going to be two driveways. (Yes)

Commissioner Gratton Miller asked if there were any ordinances on building heights.

Ms. Laughlin explained that there is a height restriction in the Commercial Code, which is that it needs to meet the Airport Master Plan. She stated that this was not anywhere close to the airspace requirement.

*****Motion: Conditionally approve Conditional Use Permit No. 4-21 subject to the conditions in the City of Elko Staff Report dated October 12, 2021, listed as follows:**

Planning Department:

1. **That Conditional Use Permit No. 4-21 shall be personal to the permittee and applicable only to the submitted application conforming to the exhibits as presented.**
2. **The Conditional Use Permit will expire within one (1) year of the date of approval if the Applicant is not actively engaged in developing the property.**
3. **Exterior lighting for the complex shall be shielded and cutoff with minimal lighting spilling over into the neighboring properties. An illumination schedule is required to ensure lighting is adequate for safety with minimal impact to adjacent properties.**
4. **The area to be landscaped with a combination of trees and shrubs as presented in the landscape plan and shall be maintained by the property owner.**
5. **The property and the buildings to be maintained in an acceptable condition at all times.**
6. **A required screen wall between the proposed use and residential use is required to comply with 3-2-3(J).**

Development Department:

DRAFT

1. **Three existing parcels to be merged and recorded prior to issuance of a Building Permit.**
2. **The driveway at the southwest corner to be limited to right-in/right-out movements only.**
3. **Stormwater General Construction Permit from the Nevada Department of Environmental Protection required prior to issuance of a Building or Grading Permit. Please see the NDEP website for submittal information.**
4. **Surface Area Disturbance Permit from the Nevada Department of Environmental Protection required prior to site disturbance. Please see the NDEP website for submittal information.**
5. **Low Impact Development design is required as part of the drainage and landscape plan. Please identify the LID features on the construction drawings.**

Commissioner Miller's findings to support the recommendation was the proposed development is in conformance with the Land Use Component of the Master Plan. The proposed development with the recommended conditions is in conformance with the existing transportation infrastructure and the Transportation Component of the Master Plan. The site is suitable for the proposed use. The proposed development is in conformance with the City Wellhead Protection Program. The proposed use is in conformance with City Code 3-2-10(B) General Commercial with the approval of the Conditional Use Permit. The proposed development is in conformance with 3-2-3, 3-2-4, 3-2-17, 3-8, and 3-2-18 of the Elko City Code.

Moved by Commissioner Gratton Miller, seconded by Commissioner Tera Hooiman.

Motion passed unanimously (7-0).

2. Review, consideration, and possible action on an amendment to Conditional Use Permit No. 8-19, filed by Elko West Properties, LLC., which would allow for the development of an apartment complex within a C (General Commercial) Zoning District, and matters related thereto. **FOR POSSIBLE ACTION**

   The subject property is located generally on the south side of Errecart Boulevard, approximately 545' west of Lamoille Highway.

Sheldon Hetzel, 780 W Silver Street, explained that this was an amendment to an existing Conditional Use Permit that was granted last year. There have been some changes in the market that they are reacting to. They will be providing some three bedroom units, in addition to the two bedroom units that were originally slated on the plan. Housing prices have taken a huge jump, which creates some issues for some people in town, so they are giving them an alternative to building a house. This Plan will provide for that. They worked with staff to work out a few other issues that they wanted to clarify.

Mark Gaughan, 301 Vilberti Court, Las Vegas, Nevada, with Elko Holding Group, which is the adjacent neighbor to this project. His concern was that he recalled that the road was a no name road, and now it was going to be called Summit Track. He thought it should be called the project next to it, which is Juniper Ridge. He also wanted to thank staff, Ms. Laughlin, Scott Wilkinson, and Shelby for helping to get most of his concerns knocked out prior to the meeting.

DRAFT

Ms. Laughlin went through City of Elko Staff Report dated October 15, 2021. Staff recommended conditional approval with the conditions and findings listed in the Staff Report. To Answer to Mark's Question. Looking back to how the easement was granted to Elko County from the BLM for the roadway. It was granted as being called Elko Summit Raceway Road. Staff asked that the name be continued with the development.

Ms. Rambo stated that she had one condition, which is to provide a crosswalk across Errecart Blvd to facilitate pedestrian movement. Since there is no other sidewalk on this side of Errecart that would access Lamoille Highway, staff felt it was necessary for them to provide access to the shared use path.

There was discussion regarding the location of the crosswalk. Mr. Hetzel said they were willing to work with staff to determine the best location.

Mr. Thibault recommended approval as presented by staff.

Ms. Winrod had no comments or concerns and recommended approval.

Ms. Laughlin stated that the City Manager's Office recommended approval as presented by staff.

***Motion: Conditionally approve an amendment to Conditional Use Permit No. 8-19 subject to the conditions in the City of Elko Staff Report dated October 15, 2021, listed as follows:**

Planning Department:

1. **The CUP 8-19 shall be personal to the permittee and applicable only to the submitted application conforming to the exhibits as presented.**
2. **The Errecart Boulevard right-of-way is to be landscaped. A landscape plan will be required for submittal and approval. All landscaping shall include a combination of trees and shrubs. Landscaping shall be installed and not obstruct the view of oncoming traffic at the intersections. The landscape plan is to include features which create a "front" for the development adjacent to Errecart Boulevard and should be similar in nature to the landscaping along the north side of Errecart Boulevard. Owner or developer is to provide such maintenance and care as is required to obtain the effect intended by the original landscape plan for the development.**
3. **CUP 8-19 to be recorded with the Elko County Recorder within 90 days after commencement of work.**
4. **The permit shall be personal to the permittee, Elko West Properties, LLC. and applicable only to the specific use of multiple family residential and to the specific property for which it is issued. However, the Planning Commission may approve the transfer of the conditional use permit to another owner. Upon issuance of an occupancy permit for the conditional use, signifying that all zoning and site development requirements imposed in connection with the permit have been satisfied, the conditional use permit shall thereafter be transferable and shall run with the land, whereupon the maintenance or special conditions imposed by the permit, as well as compliance with other provisions of the zoning district, shall be the responsibility of the property owner.**

DRAFT

5. **Civil improvement plans are required for review and possible approval. Civil improvements are required on all frontages. No on-street parking will be allowed on Errecart Boulevard or Summit Raceway Rd.**
6. **No RV storage allowed.**
7. **Building #1 which includes the clubhouse /office shall be completed prior to the issuance of any certificate of occupancy for any other buildings.**
8. **All parking lot lighting is to be shielded or cut-off design.**
9. **An illumination schedule is required to ensure lighting is adequate for safety with minimal impact to adjacent properties.**
10. **There shall not be any placement of any mail gang boxes or kiosks in association with this complex placed in the city's right of way and shall remain internal to the complex**
11. **The exterior of the building shall be compatible with surrounding areas and shall be similar to what is presented in the application.**
12. **The common areas are to be maintained in an acceptable manner at all times.**
13. **The applicant shall file a parcel map for the proposed parcels shown in the application. Such parcel map shall be approved and recorded prior to certificate of occupancy on any building.**

Development Department Conditions:

1. **Provide a crosswalk across Errecart to facilitate pedestrian movement to the north along Lamoille Highway.**

Utility Department Conditions:

1. **Water and sewer utilities will need to be extended along the frontage of Summit Raceway for future development per city code.**

Fire Department Conditions:

1. **No Concerns**

Building Department Conditions:

1. **Buildings on the same lot shall comply with 2018 IBC, Chapter 7 section 705 (see Section 705.3 Building on the same lot for identification requirements). For opening and exterior wall separation requirements see table 602.**

Commissioner Miller's findings to support the recommendation was the proposed development is in conformance with the Land Use Component of the Master Plan. The proposed development is in conformance with the existing transportation infrastructure and the Transportation component of the Master Plan. The site is suitable for the proposed use. The proposed development is in conformance with the City Wellhead Protection Program. The proposed use is consistent with surrounding land uses. The proposed use is in conformance with City Code 3-2-10(B) General Commercial district, the proposed use meets the required separation of dwelling units as found in City Code 3-2-5(E)-6. The proposed development is in conformance with 3-2-3, 3-2-4, 3-2-17, 3-2-18, and 3-8 of the Elko City Code.

Moved by Commissioner Gratton Miller, seconded by Commissioner John Lemich.

DRAFT

Motion passed unanimously (7-0).

B. MISCELLANEOUS ITEMS, PETITIONS, AND COMMUNICATIONS

1. Review, consideration, and possible action on Temporary Use Permit No. 1-21, filed by MP Elko LLC., for the temporary use of storage unit within a C (General Commercial) Zoning District, and matters related thereto. **FOR POSSIBLE ACTION**

   Extra temporary storage is needed by Marshalls for holiday merchandise. An 8'x40' container is proposed for this storage on the back side of the Marshalls building.

Lana Carter, Carter Engineering, explained that what they had was a storage container that they would like to put in the back. It would come out the back door, where they currently have indoor storage. During the holidays they get a lot of turnover, so it would help them to have this container for extra storage for extra merchandise to keep the shelves stocked. The plan is to have the container removed after holidays. Ms. Carter thought it would be around the end of February. She also explained that the Planning Commission would probably see them coming back on a yearly basis asking to have the container.

Ms. Laughlin went over the City of Elko Staff Report dated October 12, 2021. Staff recommended conditional approval with the findings and conditions listed in the Staff Report.

Ms. Rambo had no other comments or conditions.

Mr. Thibault recommended approval without additional comments or conditions.

Ms. Winrod had no comments or concerns and recommended approval.

Ms. Laughlin reported that the City Manager's Office recommended approval as presented by staff.

Commissioner Lemich asked if it was going to be a trailer, or a storage container.

Ms. Laughlin explained that it was a connex box.

Chairman Dalling said he had seen these around town and noted that this was the first one he had seen permitted.

Commissioner Hooiman said she appreciated the proactiveness.

Ms. Carter added that she thought the Planning Commission would see them back every year at this time. They appreciated the Commission working with them on this, because it is a problem this time of year, but it is a good problem to have.

Ms. Laughlin added that the Planning Commission had the right to state that from November 1st to the end of February for 2021, 2022, 2023, or whatever time period they wanted. The Planning

DRAFT

Commission has the right to approve this for multiple years, they don't need to only approve it for this year.

Chairman Dalling said he would give them a 5-year window. It is always going to be a shopping thing. He said he would also give them from November 15th through February 28th for five years.

Commissioner Miller said he was fine with the five years, but he thought they should give them the extra couple days and start it on November 1st.

Chairman Dalling asked why.

Commissioner Miller he said it would give them more time next year.

Commissioner Hooiman asked if they wanted to give them extra days on the front side instead of the back.

Ms. Carter stated that they would appreciate it if they could have it sooner. November 1st is a good time, because that's the time when the Christmas stuff is starting to come out.

*****Motion: Conditionally approve Temporary Use Permit No. 1-21 subject to the following conditions found in the City of Elko Staff Report dated October 15, 2021, with a modification to the time period by the Planning Commission, listed as follows:**

Planning Department:

1. **The temporary use applies to APN 001-660-133 & 001-660-036 for the specific use as outlined in the application and site plan.**
2. **All items/materials stored must be inert.**

Planning Commission:

1. **The use is permitted for the period of November 1st to February 28th for five years, beginning in 2021.**

Commissioner Miller's findings to support the approval was the proposed TUP is in conformance with the Land Use Component of the Master Plan. The proposed TUP is in conformance with the Transportation Component of the Master Plan. The proposed TUP is in conformance with Elko City Code 3-2-3(C)(5). The proposed TUP is in conformance with Elko City Code 3-2-17. The parcel is not located in a designated flood zone.

Moved by Commissioner Gratton Miller, Seconded by Commissioner Tera Hooiman.

****Motion passed unanimously (7-0).***

2. Special election of Secretary for the remainder of 2021, and matters related thereto. **FOR POSSIBLE ACTION**

   Pursuant to Section 3-4-1 (E) of the City Code, vacancies occurring otherwise than through the expiration of term shall be filled for the unexpired term. The planning commission appointed Ms. Tera Hooiman Vice Chairman of the Planning

DRAFT

Commission at their special election October 5, 2021 leaving the secretary position vacant.

***Commissioner Tera Hooiman nominated Commissioner Gratton Miller for Secretary; a vote was taken and passed.**

3. Review, consideration, and possible action to set regular meeting dates as well as special meeting dates for 2022, and matters related thereto. **FOR POSSIBLE ACTION**

*****Motion: Approve the Planning Commission 2022 Meeting Dates as presented.**

Moved by Commissioner Gratton Miller, Seconded by Commissioner Tera Hooiman.

****Motion passed unanimously (7-0).***

II. REPORTS

A. Summary of City Council Actions.

Ms. Laughlin reported that there had been no Planning and Zoning applications on the last two City Council Agendas.

B. Summary of Redevelopment Agency Actions.

Ms. Laughlin reported there was a RAC meeting on October 28th. They had elections of officers, and discussed numerous reports, which included the Storefront Program, budget, and the block end project. We will be having an RDA meeting sometime in the next month to do final acceptance of the block end project.

C. Professional articles, publications, etc.

1. Zoning Bulletin

D. Miscellaneous Elko County

E. Training

Ms. Laughlin reported that she just returned from the Nevada State Planning Conference in Reno. She was a little disappointed in the sessions. They really focused on Reno and Las Vegas, which is understandable. Even the sessions that had to do with rural communities didn't really focus on things that were beneficial.

COMMENTS BY THE GENERAL PUBLIC

There were no public comments made at this time.

DRAFT

NOTE: The Chairman or Vice Chairman reserves the right to change the order of the agenda and if the agenda is not completed, to recess the meeting and continue on another specified date and time. Additionally, the Planning Commission reserves the right to combine two or more agenda items, and/or remove an item from the agenda, or delay discussion relating to an item on the agenda at any time.

ADJOURNMENT

There being no further business, the meeting was adjourned.

Jeff Dalling, Chairman

Tera Hooiman, Secretary

DRAFT

Agenda Item # I.A.

Elko City Planning Commission
Agenda Action Sheet

1. Title: **Presentation of a Plaque of Appreciation to Tera Hooiman for her service on the Elko City Planning Commission. INFORMATION ONLY – NON ACTION ITEM**

2. Meeting Date: **December 7, 2021**

3. Agenda Category: *PRESENTATION*

4. Time Required: **10 Minutes**

5. Background Information: **Commissioner Tera Hooiman has served on the Elko City Planning Commission from January 2014 until December of 2021.**

6. Business Impact Statement: **Not Required**

7. Supplemental Agenda Information:

8. Recommended Motion:

9. Findings:

10. Prepared By: **Shelby Knopp, Administrative Assistant**

11. Agenda Distribution:

Elko City Planning Commission
Agenda Action Sheet

1. **Review, consideration and possible recommendation to City Council for Rezone No. 1-21, filed by Dominion Engineering on behalf of McDonald's USA, Inc., for a change in zoning from R (Single Family and Multiple Family Residential) to C (General Commercial) Zoning District, approximately 8,812 square feet of property, to allow for a proposed redevelopment of the property, and matters related thereto. FOR POSSIBLE ACTION**

2. Meeting Date: **December 7, 2021**

3. Agenda Category: ***PUBLIC HEARINGS,***

4. Time Required: **15 Minutes**

5. Background Information: **The existing parcel is currently two different zoning districts. This application is requesting to create one zoning district on the parcel consistent with the proposed redevelopment of the parcel.**

6. Business Impact Statement: **Not Required**

7. Supplemental Agenda Information: **Application, Staff Memo**

8. Recommended Motion: **Forward a recommendation to City Council to adopt an ordinance which approves Rezone No. 1-21 based on facts and findings as presented in Staff Report dated November 18, 2021.**

9. Findings: **See Staff Report dated November 18, 2021.**

10. Prepared By: **Cathy Laughlin, City Planner**

11. Agenda Distribution: **Dominion Engineering Associates, L.C.**
c/o Darrin Perkes, PLA
darrin@dominioneng.net

McDonald's USA, Inc.
c/o Chuck Morgan
chuck.morgan@us.mcd.com

STAFF COMMENT FLOW SHEET
PLANNING COMMISSION AGENDA DATE: 12/7
Do not use pencil or red pen, they do not reproduce

Title: Rezone No. 1-21

Applicant(s): Dominion Engineering on behalf of McDonald's USA, Inc.

Site Location: 1995 Idaho Street - APN 001-560-003

Current Zoning: C+R Date Received: 11/12/21 Date Public Notice: 11/26

COMMENT: This is to change the zoning on a portion of APN 001-560-003 from R (Single Family + Multiple Family Residential) to C (General Commercial).

****If additional space is needed please provide a separate memorandum****

Assistant City Manager: Date: 11/19/21

Recommend approval as presented by staff

Initial

City Manager: Date: 11/22/21

No comments/concerns.

CC

Initial

City of Elko
1751 College Avenue
Elko, NV 89801
(775) 777-7160
FAX (775) 777-7119

CITY OF ELKO STAFF REPORT

MEMO DATE: November 18, 2021
PLANNING COMMISSION DATE: December 7, 2021
APPLICATION NUMBER: REZONE 1-21
APPLICANT: Dominion Engineering Associates, L.C. on behalf of McDonald's USA, Inc.

PROJECT DESCRIPTION:
A rezone from (R) Single Family and Multiple Family Residential to (C) General Commercial to allow for the redevelopment of the property with only one zoning district on the parcel.

STAFF RECOMMENDATION:

RECOMMEND to APPROVE, subject to findings of fact as stated in this report.

PROJECT INFORMATION

PARCEL NUMBER: 001-560-003

PARCEL SIZE: 1.56 acres

EXISTING ZONING: (C) General Commercial and (R) Single family and multiple family residential

MASTER PLAN DESIGNATION: (COMM-HWY) Commercial Highway

EXISTING LAND USE: Developed land, proposed to be demolished and redeveloped with the same use

NEIGHBORHOOD CHARACTERISTICS:

The property is surrounded by:
North: General Commercial (C) and (R) Residential / Developed
South: Public, Quasi Public (PQP) / Developed
West: Residential (R) / Developed
East: Industrial Commercial (IC) / Developed

PROPERTY CHARACTERISTICS:

The property is generally flat.
The property is access from Idaho Street as well as Boyd Drive.

MASTER PLAN AND CITY CODES:

Applicable Master Plans and City Code Sections are:

- City of Elko Master Plan – Land Use Component
- City of Elko Master Plan – Transportation Component
- City of Wellhead Protection Plan
- City of Elko Zoning – Section 3-2-4 Establishment of Zoning Districts
- City of Elko Zoning – Section 3-2-10 Commercial Zoning District
- City of Elko Zoning – Section 3-2-17 Traffic, Access, Parking and Loading Regulations
- City of Elko Zoning – Section 3-2-21 Amendments
- City of Elko Zoning – Section 3-8 Flood Plain Management

BACKGROUND:

1. The portion of the property in which is requesting the zone amendment was part of the Golf Course Terrace Unit 1 subdivision. It was originally planned as part of the subdivision to have a dedicated road behind the parcels which is now the area that is zoned (R) Residential.
2. The rezone includes only a portion of APN 001-560-003. The entire parcel is 67, 954 sq. ft. and the rezone includes only 8,812 sq. ft.
3. The property fronts Idaho Street as well as Boyd Drive.
4. The property has been developed therefore City of Elko utilities have been utilized.

5. Other non-city utilities are located in the immediate area.

MASTER PLAN

Land use:

1. The Master Plan Land Use Atlas shows the area as Commercial Highway.
2. C- General Commercial is a corresponding zoning district for Commercial Highway as well as Planned Commercial, Industrial Commercial and Convenience Commercial.
3. Objective 4: Consider a mixed-use pattern of development for the downtown area, and for major centers and corridors, to ensure the area's adaptability, longevity, and overall sustainability.
4. Objective 6: Encourage multiple scales of commercial development to serve the needs of the region, the community, and individual neighborhoods.
5. Objective 8: Encourage new development that does not negatively impact County-wide natural systems, or public/federal lands such as waterways, wetlands, drainages, floodplains etc., or pose a danger to human health and safety.

The proposed zone district is in conformance with the Land Use Component of the Master Plan.

Transportation:

1. The area will be accessed from Idaho Street and Boyd Drive.
2. Idaho Street is classified as a Major Arterial and Boyd Drive is classified as a local.
3. There is pedestrian access along both frontages.
4. The proposed development is reducing the existing access points off Idaho Street from two to one.

The proposed zone district is compatible with the Transportation Component of the Master Plan and is consistent with the existing transportation infrastructure.

ELKO REDEVELOPMENT PLAN:

The property is not located within the redevelopment area.

ELKO WELLHEAD PROTECTION PLAN:

1. The property is located within a 2-year capture zone for the City of Elko wells.

The proposed use of the property does not present a hazard to City wells.

SECTION 3-8

1. This parcel is not designated in a Special Flood Hazard Area (SFHA).

SECTION 3-2-4 ESTABLISHMENT OF ZONING DISTRICTS

1. Section 3-2-4(B) Required Conformity To District Regulations: The regulations set forth in this chapter for each zoning district shall be minimum regulations and shall apply uniformly to each class or kind of structure or land, except as provided in this subsection.

- No building, structure or land shall hereafter be used or occupied and no building or structure or part thereof shall hereafter be erected, constructed, moved, or structurally altered, unless in conformity with all regulations specified in this subsection for the district in which it is located.

- No building or other structure shall hereafter be erected or altered:
  a. To exceed the heights required by the current City Airport Master Plan;
  b. To accommodate or house a greater number of families than as permitted in this chapter;
  c. To occupy a greater percentage of lot area; or
  d. To have narrower or smaller rear yards, front yards, side yards or other open spaces, than required in this title; or in any other manner contrary to the provisions of this chapter.

- No part of a required yard, or other open space, or off street parking or loading space, provided in connection with any building or use, shall be included as part of a yard, open space, or off street parking or loading space similarly required for any other building.

- No yard or lot existing on the effective date hereof shall be reduced in dimension or area below the minimum requirements set forth in this title.

The property as developed today as well as the proposed redevelopment of the property as a fast food restaurant, conforms to Section 3-2-4 of city code.

SECTION 3-2-10 (C) General Commercial Zoning District:

1. Conformance with the section is required as the property is redeveloped.

SECTION 3-2-17 Traffic, Access, Parking and Loading Regulations:

1. Conformance with the section is required as the property is redeveloped.

SECTION 3-2-21 Amendments:

1. The applicant has conformed to this section of code with the filing of the application.

FINDINGS

1. The proposed rezone is in conformance with the Master Plan Land Use Component.

2. The proposed rezone is compatible with the Master Plan Transportation Component and is consistent with the existing transportation infrastructure.

3. The proposed rezone is consistent with City of Elko Wellhead Protection Plan.

4. The proposed rezone is consistent with Elko City Code 3-2-4 (B) & (C)

5. The proposed rezone is in conformance with Section 3-2-10(B) C-General Commercial Zoning District.

6. The proposed rezone is consistent with Elko City Code 3-2-17

7. Development under the proposed rezone will not adversely impact natural systems, or public/federal lands such as waterways, wetlands, drainages, floodplains etc. or pose a danger to human health and safety.

STAFF RECOMMENDATION:

Staff recommends this item be **APPROVED**

CITY OF ELKO
Planning Department

Website: www.elkocity.com
Email: planning@elkocitynv.gov

1751 College Avenue • Elko, Nevada 89801 • (775) 777-7160 • Fax (775) 777-7219

November 30, 2021

Dominion Engineering
Attn: Darrin Perkes
Darrin@dominioneng.net

Re: Rezone No. 1-21

Dear Applicant/Agent:

Enclosed is a copy of the agenda for an upcoming Planning Commission meeting. Highlighted on the agenda is the item or items that you have requested to be acted on at the meeting. Also enclosed is pertinent information pertaining to your request. Please review this information before the meeting.

The Planning Commission requests that you, or a duly appointed representative, be in attendance at this meeting to address the Planning Commission. If you will not be able to attend the meeting but wish to have a representative present, please submit a letter to the Planning Commission authorizing this person to represent you at the meeting.

To participate in the virtual meeting on a computer, laptop, tablet, or smart phone go to: https://global.gotomeeting.com/join/303168685. You can also dial in using your phone at **+1 (408) 650-3123** The **Access Code** for this meeting is **303-168-685.**

If you have any questions regarding this meeting, the information you received, or if you will not be able to attend this meeting, please call me at your earliest convenience at (775) 777-7160.

Sincerely,

Shelby Knopp

Shelby Knopp
Administrative Assistant

Enclosures

CC: McDonald's USA, Inc., Attn: Chuck Morgan, Chuck.morgan@us.mcd.com

Rezone 1-21 Dominion Eng. / McDonald's

YPNO	PANAME	PMADD1	PMADD2	PMCTST	PZIP
001590020	1940 IDAHO ST LLC	ATTN: SEAN PHELAN	800 MARIQUITA RD	CORRALES NM	87048-8240
001571002	AGUILAR, DANIEL		1019 SILVER ST	ELKO NV	89801-3936
001571010	ALLSET HOME BUYERS	C/O BARONE, MITCHELL	7020 PEPPERMINT DRIVE	RENO NV	89506-1755
001574003	ARMUTH, DIANE K		1928 VIEW DR	ELKO NV	89801-2622
001571012	AVERETT, TRENT		5073 SNOWY MOUNTAIN DR	WINNEMUCCA NV	89445-3992
001583002	BEACHEL, DELLA R		PO BOX 1558	ELKO NV	89803-1558
001583003	BEHONEK, JAMES B TR		2024 GOLF DR	ELKO NV	89801-2614
001583001	BOWMAN, JESSIE LIAN		698 BOYD DR	ELKO NV	89801-2608
001574006	BROWN, JAMES ERIC & ALICIA		1964 VIEW DR	ELKO NV	89801-2622
001574002	BYARS, JAMES K & JENNY L TR		1916 VIEW DR	ELKO NV	89801-2622
001590010	DHARNI HOTELS LLC		9481 N 3830 W	CEDAR HILLS UT	84062-8004
001601011	ELKO PROPERTIES LLC		1750 MANZANITA DR STE 1	ELKO NV	89801-1600
001574009	FINCHER, JERALD T & DEANNA M		697 BOYD DR	ELKO NV	89801-2607
001601012	GBK PROPERTIES LLC	ATTN: JIM TAGGART	76 W 13775 S STE 2	DRAPER UT	84020-8875
001590021	GM INVESTMENTS LLC		7124 BEACON DR	RENO NV	89506-5638
001560008	HANINGTON, GARY ET AL	C/O AMERICAN HIGH VOLTAGE	2002 IDAHO ST	ELKO NV	89801-2627
001572008	HERNANDEZ, LOURDES		2005 ELLIS WAY	ELKO NV	89801-2624
001574007	KONAKIS, FERRON & TRACY	CO/NICK S KONAKIS	1898 LAXALT WAY	ELKO NV	89801-2693
001574004	LATCHAW, ROBERT A ET AL		1940 VIEW DR	ELKO NV	89801-2622
001571007	LOUP, MICHAEL E		1965 VIEW DR	ELKO NV	89801-2664
001560019	MAVERICK ELKO LLC } 1 pc		2926 MONTESSOURI ST	LAS VEGAS NV	89117-3152
001560021	MAVERICK ELKO LLC } 1 pc		2926 MONTESSOURI ST	LAS VEGAS NV	89117-3152
001571013	MCDADE, JOSEPH & YOLANDA		2028 ELLIS WAY	ELKO NV	89801-2623
001574005	MCLEAN, JEFFREY SCOTT		1952 VIEW DR	ELKO NV	89801-2622
001574008	MEDINA, ANGELO T & VIVIAN		1988 VIEW DR	ELKO NV	89801-2622
001571006	MOORE, JONATHAN & ANGELA		1989 VIEW DR	ELKO NV	89801-2664
001560002	NEVADA STATE OF	C/O BUILDINGS & GROUNDS	1263 S STEWART ST	CARSON CITY NV	89712-0001
001571004	NIELSON, STEVEN & LEA ANNE		2015 GOLF DR	ELKO NV	89801-2613
001571011	PRUNTY, GARY A		2016 ELLIS WAY	ELKO NV	89801-2623
001583004	QUINTENO, JONATHAN ESCOBAR		2034 GOLF DR	ELKO NV	89801-2614

001571005	SCHOEN, MARK S	2005 GOLF DRIVE	ELKO NV	89801-2564
001571008	SEYMORE, DEBBIE M ET AL	1953 VIEW DR	ELKO NV	89801-2664
001571009	TAYLOR, DANIELLE	2004 ELLIS WAY	ELKO NV	89801-2623
001571003	WAITS, PATSY A TR	HC 65 BOX 8	AUSTIN NV	89310-9103

33

* = Property Owners Outside the original 300ft radius to achive 30 parcels

Post Marked 11/24/21

NOTICE OF PUBLIC HEARING

NOTICE IS HEREBY GIVEN that the Elko City Planning Commission will conduct a public hearing on Tuesday, December 7, 2021 beginning at 5:30 P.M. P.S.T. at Elko City Hall, 1751 College Avenue, Elko, Nevada, and that the public is invited to provide input and testimony on these matters under consideration in person, by writing, by representative, or via Gotomeeting.com.

The public can view or participate in the virtual meeting on a computer, laptop, tablet or smart phone at https://global.gotomeeting.com/join/303168685. You can also dial in using your phone. **+1 (408) 650-3123.** The **Access Code** for this meeting is **303-168-685.** Members of the public that do not wish to use GoToMeeting may call in at (775)777-0590. Comments can also be emailed to **planning@elkocitynv.gov**.

The specific item to be considered under public hearing format is:

- Rezone No. 1-21, filed by Dominion Engineering on behalf of McDonald's USA, LLC, for a change in zoning from R (Single-Family and Multiple-Family Residential) to C (General Commercial) Zoning District, approximately 8,812 square feet of property, specifically a portion of APN 001-560-003, located generally on the west corner of the intersection of Boyd Drive and Idaho Street, more particularly described as:

  A portion of an entire tract of land in the SE ¼ SE ¼ NW ¼ T. 34 N., R. 55 E., MDB&M, more particularly described as follows:
  Commencing at the center ¼ corner of said Section 11; Thence along the East-West ¼ section line S 89°55'27" W., 578.99 feet to the point of beginning and also being on the northerly boundary line of the Nevada State Highway Department division yards as described in Elko County Deeds, Book 57, page 352, on file in the Office of the Elko County Recorder; thence continuing S. 89°55'27" W., 85.39 feet to Corner No. 2 of said tract, the SW corner of said SE ¼ SE ¼ NW ¼; also being a corner of that parcel described in Elko County Official Records, Book 1, page 203; thence along the 1/64 line N. 0°24'27" W., 80.00 feet to Corner No. 3 of said tract, a point on the southerly line of Golf Course Terrace Subdivision Unit No. 1, as shown on that map on file in the Office of the Elko County Recorder (File No. 13265); thence along said sub-division boundary N. 89°55'27" E., 134.90 feet to Corner No. 4 of said tract, the Southeasterly corner of said subdivision; thence S. 31°26'07" W. 93.84 feet to the point of beginning.

  The intent of the zone change is to allow for proposed redevelopment of the property.

Additional information concerning this item may be obtained by contacting the Elko City Planning Department at (775) 777-7160.

ELKO CITY PLANNING COMMISSION

CITY OF ELKO PLANNING DEPARTMENT
1751 College Avenue * Elko * Nevada * 89801
(775) 777-7160 phone * (775) 777-7219 fax

APPLICATION FOR ZONE CHANGE

APPLICANT(s): DARRIN PERKES
MAILING ADDRESS: 5684 SOUTH GREEN STREET, MURRAY, UTAH 84123
PHONE NO (Home) 801-815-4227 **(Business)** 801-713-3000
NAME OF PROPERTY OWNER (If different): McDonald's USA, LLC
(Property owner's consent in writing must be provided.)
MAILING ADDRESS: 110 N Carpenter St, Chicago, IL 60607-2101
LEGAL DESCRIPTION AND LOCATION OF PROPERTY INVOLVED (Attach if necessary):
ASSESSOR'S PARCEL NO.: 001-560-003 **Address** 1995 IDAHO STREET
Lot(s), Block(s), &Subdivision
Or Parcel(s) & File No. DOC. NO. 025300259

FILING REQUIREMENTS:

Complete Application Form: In order to begin processing the application, an application form must be complete and signed. *Complete* applications are due at least 21 days prior to the next scheduled meeting of the Elko City Planning Commission (meetings are the 1st Tuesday of every month).

Fee: A $500.00 non-refundable filing fee.

Area Map: A map of the area proposed for this zone change must be provided.

Plot Plan: A plot plan provided by a properly licensed surveyor depicting the existing condition drawn to scale showing property lines, existing and proposed buildings, building setbacks, distances between buildings, parking and loading areas, driveways and other pertinent information must be provided.

Legal Description: A complete legal description of the boundary of the proposed zone change must be provided as well as a map depicting the area to be changed stating the wording: area to be changed from "x" to "x"; (LI to R, for example).

Note: One .pdf of the entire application must be submitted as well as one set of legible, reproducible plans 8 ½" x 11" in size. If the applicant feels the Commission needs to see 24" x 36" plans, 10 sets of pre-folded plans must be submitted.

Other Information: The applicant is encouraged to submit other information and documentation to support this Rezone Application.

RECEIVED
NOV 12 2021

1. Identify the existing zoning classification of the property: RESIDENTIAL

2. Identify the zoning Classification being proposed/requested: COMMERCIAL

3. Explain in detail the type and nature of the use anticipated on the property:
THIS SMALL PORTION OF PROPERTY IN NORTH WEST CORNER IS CURRENTLY USED AS LANDSCAPE AND OUTDOOR PICNIC DINING AREA FOR THE MCDONALD'S RESTAURANT. IT IS ANTICIPATED THAT THIS PROPERTY WILL CONTINUE WITH THIS USE.

4. Explain how the proposed zoning classification relates with other zoning classifications in the area: WITH THE ZONE CHANGE, THE ENTIRE McDONALD'S PROPERTY WILL BE ZONED COMMERCIAL. NEIGHBORING PROPERTIES TO THE EAST AND SOUTH ARE ZONED COMMERCIAL, PROPERTIES TO THE NORTH ARE ZONED AS RESIDENTIAL.

5. Identify any unique physical features or characteristics associated with the property:
THE PORTION OF PROPERTY TO BE REZONED IS CURRENTLY BEING USED AS LANDSCAPE AND OUTDOOR DINING AREA, IT WILL CONTINUE TO BE USED AS SUCH. NO UNIQUE PHYSICAL FEATURES HAVE BEEN IDENTIFIED.

(Use additional pages if necessary to address questions 3 through 5)

By My Signature below:

☑ I consent to having the City of Elko Staff enter on my property for the sole purpose of inspection of said property as part of this application process.

☐ I object to having the City of Elko Staff enter onto my property as a part of their review of this application. (Your objection will not affect the recommendation made by the staff or the final determination made by the City Planning Commission or the City Council.)

☑ I acknowledge that submission of this application does not imply approval of this request by the City Planning Department, the City Planning Commission and the City Council, nor does it in and of itself guarantee issuance of any other required permits and/or licenses.

☑ I acknowledge that this application may be tabled until a later meeting if either I or my designated representative or agent is not present at the meeting for which this application is scheduled.

☑ I have carefully read and completed all questions contained within this application to the best of my ability.

Applicant / Agent Darrin Perkes
(Please print or type)

Mailing Address 5684 South Green Street
Street Address or P.O. Box

Murray, Utah 84123
City, State, Zip Code

Phone Number: 801-713-3000

Email address: darrin@dominioneng.net

SIGNATURE: _____

FOR OFFICE USE ONLY

File No.: 1-21 **Date Filed:** 11/12/21 **Fee Paid:** $500 CK# 8155

DOMINION
Engineering Associates, L.C.
Engineering · Land Planning · Landscape Architecture · Surveying

RECEIVED
NOV 12 2021

Transmittal

Date: November 10, 2021

Attention: City of Elko
Attn: Shelby Knopp
1751 College Avenue
Elko, NV
89801
775-777-7160

Method: Fed-Ex Delivery

Re: McDonald's Zone Change Application

Items Included:
Application fee of $500
Application for Zone Change
Site Plan Exhibit (11 x 17 & 24 x 36 format)
CD with application and drawing in pdf form
Printed email of McDonald's Authorization

By: Darrin Perkes, PLA
Dominion Engineering
darrin@dominioneng.net
801-713-3000

Darrin Perkes

From: Morgan Chuck <chuck.morgan@us.mcd.com>
Sent: Tuesday, November 9, 2021 4:38 PM
To: sknopp@elkocitynv.gov
Cc: Darrin Perkes
Subject: McDonalds Elko rezoning application

RECEIVED
NOV 12 2021

Hi Shelby...Darrin Perkes of Dominion Engineering is authorized to act on McDonalds behalf with regards to the McDonald's Elko rezoning application. If you have any question please do not hesitate to reach out to me.
Thanks

Chuck Morgan
| Area Construction Manager – McDonald's USA, Inc.| U.S. Restaurant Development |
4643 South Ulster St, Suite 1300 | Denver, CO 80237 | **Cell: 303-807-6209**
chuck.morgan@us.mcd.com

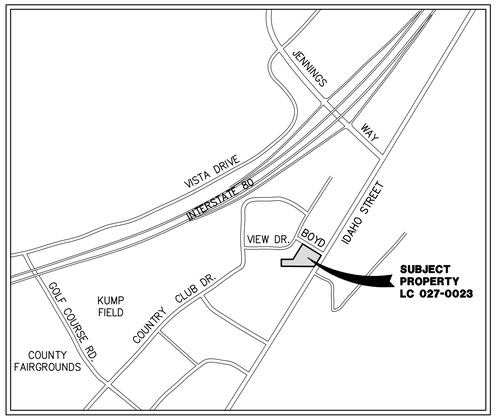

VICINITY MAP
City of Elko, Elko County, Nevada
– Not to Scale –

FOUND STREET INTERSECTION MONUMENT

SSMH RIM 5095.77
℄ E = 5082.6±

JERALD & DIANNA FINCHER
LOT 1
697 BOYD DRIVE
APN: 001-574-009

GOLF COURSE TERRACE SUBDIVISION TO THE CITY OF ELKO UNIT NO. 1
ZONED R
(SINGLE-FAMILY & MULTIPLE-FAMILY RESIDENTIAL)

ANGELO & VIVIAN MEDINA
LOT 2
1988 VIEW DRIVE
APN: 001-574-008

N31°26'07"E 209.97' (210.00')

JAMES & ALICIA BROWN
LOT 4
1964 VIEW DRIVE
APN: 001-574-006

STANLEY KONAKIS
LOT 3
1976 VIEW DRIVE
APN: 001-574-007

N89°55'27"E 134.90'

CORNER No. 3

CORNER No. 4

AREA TO BE REZONED
FROM RESIDENTIAL
TO COMMERCIAL
8,812 sq. ft.
or 0.20 acres±

N00°24'27"W 80.00'

STATE OF NEVADA
DOC No. 011100039
1951 IDAHO STREET
APN: 001-560-002

FOUND WEST QUARTER CORNER SECTION 11, T34N, R55E, MDB&M.

1992.92'

CORNER No. 2

T34N R55E
1/4
S10 | S11
PLS 6203

S89°55'27"W 378.94' (378.63')

S89°55'27"W 2657.30' BASIS OF BEARING

STATE OF NEVADA
BOOK 57, PAGE 352
1951 IDAHO STREET
APN: 001-560-002
ZONED PQP (PUBLIC, QUASI-PUBLIC)

BOYD DRIVE
(EXISTING 60' WIDE PUBLIC ROAD)

S58°33'53"E 250.26' (250.00')

FRANCHISE REALTY INTERSTATE CORPORATION
DOC No. 025300259
1995 IDAHO STREET

ZONED COMMERCIAL

APN: 001-560-003
REC. 65,612 SF OR 1.506 AC±
FIELD: 65,645 SF OR 1.507 AC±

IDAHO STREET
(U.S. HIGHWAY 40 - EXISTING 150' WIDE PUBLIC ROAD)

S31°26'07"W 150.38' (150.37')

CORNER No. 1

S89°55'27"W 285.44' (285.75')

POINT OF COMMENCMENT
FOUND CENTER QUARTER CORNER
SECTION 11, T34N, R55E, MDB&M.
BENCHMARK ELEVATION 5087.78 (NAVD88)

STATE OF NEVADA SURVEY MARKER
C 1/4 S 11
+
1949
ELEVATION
DEPARTMENT OF HIGHWAYS

N

0 20 40 60
Scale in Feet

AREA TO BE REZONED

A portion of an entire tract of land in the SE 1/4 SE 1/4 NW 1/4 T. 34 N. , R. 55 E. , MDB&M, more particularly described as follows:

Commencing at the center 1/4 corner of said Section 11; thence along the East–West 1/4 section line S. 89°55'27" W., 578.99 feet to the point of beginning and also being on the northerly boundary line of the Nevada State Highway Department division yards, as described in Elko County Deeds, Book 57, page 352, on file in the Office of the Elko County Recorder; thence continuing S. 89°55'27" W., 85.39 feet to Corner No. 2 of said tract, the SW corner of said SE1/4 SE 1/4 NW 1/4:, also being a corner of that parcel described in Elko County Official Records, Book 1, page 203; thence along the 1/64 line N. 0°24'27" W., 80.00 feet to Corner No. 3 of said tract, a point on the southerly line of Golf Course Terrace Subdivision Unit No. 1, as shown on that map on file in the Office of the Elko county Recorder (File No. 13265); thence along said sub-division boundary N. 89°55'27" E., 134.90 feet to Corner No. 4 of said tract, the Southeasterly corner of said subdivision; thence S. 31°26'07" W. 93.84 feet to the point of beginning.

Contains 8,812 square feet or 0.20 acres, more or less

PROFESSIONAL LAND SURVEYOR STATE OF NEVADA
No. 8211
JAMES D. PITKIN
11/17/2021
12/31/2023

DRAWN JDP 4 /2013 DATE	CHECKED . DATE	**MCDONALD'S USA, LLC**	**MCDONALD'S - REZONE EXHIBIT**
DESIGNED DATE	PROJECT ENGINEER	**CITY OF ELKO, ELKO COUNTY, NEVADA**	**1995 IDAHO STREET - LC 027-0023**
APPROVED JDP DATE	PROJECT MANAGER	Dominion Engineering Associates, L.C. 5684 South Green Street Murray, Utah 84123 801-713-3000	**LOCATED IN THE SE 1/4 OF THE NW 1/4 OF SECTION 11, TOWNSHIP 34 NORTH, RANGE 55 EAST, M.D.B.&M.**

NO.	REVISIONS	BY	DATE
1	ADD ZONING AREA SQ. FT.	JDP	11.17.21
0	RELEASED FOR REVIEW	JDP	11.09.21

PROJECT NO. 3406-03
SHEET NO. 1 of 1
FILE NAME: LC 027-0023
SCALE: 1"=20'

Path: P:\McDONALDS\NEVADA\Elko\1995 Idaho Street\SURVEY\dwg\Elko Rezone Exhibit.dwg | plot date: November 17, 2021 | plotted by: Jimp

Elko City Planning Commission
Agenda Action Sheet

1. **Review, consideration and possible recommendation to City Council for Rezone No. 2-21, filed by Walsh Properties LLC., for a change in zoning from GI (General Industrial) to C (General Commercial) Zoning District, approximately 18,015 square feet, to allow for a proposed commercial retail land use of the property, and matters related thereto. FOR POSSIBLE ACTION**

2. Meeting Date: **December 7, 2021**

3. Agenda Category: ***PUBLIC HEARINGS,***

4. Time Required: **15 Minutes**

5. Background Information: **The property has recently changed ownership and the new owner is proposing a commercial land use.**

6. Business Impact Statement: **Not Required**

7. Supplemental Agenda Information: **Application, Staff Memo**

8. Recommended Motion: **Forward a recommendation to City Council to adopt an ordinance which approves Rezone No. 2-21 based on facts and findings as presented in Staff Report dated November 19, 2021.**

9. Findings: **See Staff Report dated November 19, 2021.**

10. Prepared By: **Cathy Laughlin, City Planner**

11. Agenda Distribution: **Walsh Properties LLC**
christinaassu@gmail.com
774 Fir Street
Elko, NV 89801

Lana Carter
lanalcarter@live.com

STAFF COMMENT FLOW SHEET
PLANNING COMMISSION AGENDA DATE: 12/7
Do not use pencil or red pen, they do not reproduce

Title: Rezone No. 2-21
Applicant(s): RARCA, LLC
Site Location: 123 2nd Street - APN 001-335-001
Current Zoning: GI Date Received: 11/15/21 Date Public Notice: 11/26
COMMENT: This is to change the zoning on APN 001-335 from GI (General Industrial) to C (General Commercial), to allow for a proposed retail land use

If additional space is needed please provide a separate memorandum

Assistant City Manager: Date: 11/19/21
Recommend approval as presented by Staff

SAW
Initial

City Manager: Date: 11/22/21
No comments/concerns.

cc
Initial

City of Elko
1751 College Avenue
Elko, NV 89801
(775) 777-7160
FAX (775) 777-7119

CITY OF ELKO STAFF REPORT

MEMO DATE: November 19, 2021
PLANNING COMMISSION DATE: December 7, 2021
APPLICATION NUMBER: REZONE 2-21
APPLICANT: Walsh Properties, LLC.
OTHER APPLICATIONS: Rev. 5-21

PROJECT DESCRIPTION:
A rezone from (GI) General Industrial to (C) General Commercial to allow for the development of a retail establishment.

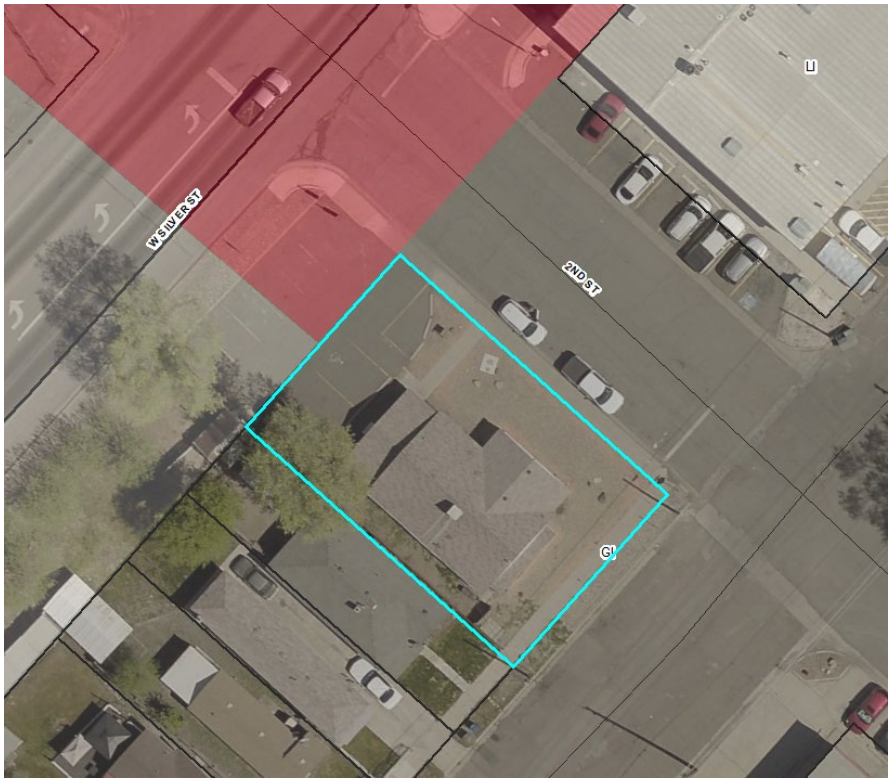

STAFF RECOMMENDATION:

RECOMMEND to APPROVE, subject to findings of fact as stated in this report.

PROJECT INFORMATION

PARCEL NUMBER: 001-335-001

PARCEL SIZE: 6,400 square feet

EXISTING ZONING: (GI) General Industrial

MASTER PLAN DESIGNATION: (MU-DTWN) Mixed Use Downtown

EXISTING LAND USE: Developed, previously a medical office

NEIGHBORHOOD CHARACTERISTICS:

The property is surrounded by:
North: General Commercial (C) / Developed
South: General Industrial (GI) / Developed
West: Light Industrial (LI) / Developed
East: General Industrial (GI) / Developed

PROPERTY CHARACTERISTICS:

The property is generally flat.
The property is located in a flood zone.
The property has Silver Street, River Street and Second Street frontage.
The existing off street parking is located in the City of Elko right-of-way

MASTER PLAN AND CITY CODES:

Applicable Master Plans and City Code Sections are:

- City of Elko Master Plan – Land Use Component
- City of Elko Master Plan – Transportation Component
- City of Wellhead Protection Plan
- City of Elko Zoning – Section 3-2-4 Establishment of Zoning Districts
- City of Elko Zoning – Section 3-2-10 Commercial Zoning District
- City of Elko Zoning – Section 3-2-17 Traffic, Access, Parking and Loading Regulations
- City of Elko Zoning – Section 3-2-21 Amendments
- City of Elko Zoning – Section 3-8 Flood Plain Management

BACKGROUND:

1. Fourteen feet of 2nd Street was vacated to the property.
2. The rezone includes all of APN 001-335-001.
3. The property has been developed therefore City of Elko utilities have been utilized.
4. Other non-city utilities are located in the immediate area.

MASTER PLAN

Land use:

1. The Master Plan Land Use Atlas shows the area as Downtown Mixed Use.
2. C- General Commercial is a corresponding zoning district for Downtown Mixed Use.
3. Objective 4: Consider a mixed-use pattern of development for the downtown area, and for major centers and corridors, to ensure the area's adaptability, longevity, and overall sustainability.
4. Objective 6: Encourage multiple scales of commercial development to serve the needs of the region, the community, and individual neighborhoods.
5. Objective 8: Encourage new development that does not negatively impact County-wide natural systems, or public/federal lands such as waterways, wetlands, drainages, floodplains etc., or pose a danger to human health and safety.

The proposed zone district is in conformance with the Land Use Component of the Master Plan.

Transportation:

1. The area will be accessed from 2nd Street with frontage along Silver Street and River Street.
2. Second Street is classified as a Residential Collector.
3. There is pedestrian access along both Second Street and River Street. Sidewalk along Silver Street will be a condition of the parcel map submittal.

The proposed zone district is compatible with the Transportation Component of the Master Plan and is consistent with the existing transportation infrastructure.

ELKO REDEVELOPMENT PLAN:

The property is not located within the redevelopment area.

ELKO WELLHEAD PROTECTION PLAN:

1. The property is not located within any capture zone for the City of Elko wells.

The proposed zone district is in conformance with the Elko Wellhead Protection Plan.

SECTION 3-2-4 ESTABLISHMENT OF ZONING DISTRICTS

1. Section 3-2-4(B) Required Conformity To District Regulations: The regulations set forth in this chapter for each zoning district shall be minimum regulations and shall apply uniformly to each class or kind of structure or land, except as provided in this subsection.

    - No building, structure or land shall hereafter be used or occupied and no building or structure or part thereof shall hereafter be erected, constructed, moved, or structurally altered, unless in conformity with all regulations specified in this subsection for the district in which it is located.

    - No building or other structure shall hereafter be erected or altered:
      a. To exceed the heights required by the current City Airport Master Plan;
      b. To accommodate or house a greater number of families than as permitted in this chapter;
      c. To occupy a greater percentage of lot area; or

d. To have narrower or smaller rear yards, front yards, side yards or other open spaces, than required in this title; or in any other manner contrary to the provisions of this chapter.

- No part of a required yard, or other open space, or off street parking or loading space, provided in connection with any building or use, shall be included as part of a yard, open space, or off street parking or loading space similarly required for any other building.

- No yard or lot existing on the effective date hereof shall be reduced in dimension or area below the minimum requirements set forth in this title.

The property as developed today, conforms to Section 3-2-4 of city code.

SECTION 3-2-10 (C) General Commercial Zoning District:

1. Conformance with the section is required.

SECTION 3-2-17 Traffic, Access, Parking and Loading Regulations:

1. The applicant has applied for a revocable permit, Rev. 5-21, to occupy the Silver Street right-of-way for the existing off street parking.
2. Conformance with the section is required.

The property is required to comply with Section 3-2-17 of city code.

SECTION 3-2-21 Amendments:

1. The applicant has conformed to this section of code with the filing of the application.

SECTION 3-8 FLOODPLAIN MANAGEMENT

1. This parcel is located in a Special Flood Hazard Area (SFHA), Floodzone AE.

The development will be required to comply with Elko City Code Section 3-8 if there are any significant changes made to the property.

FINDINGS

1. The proposed rezone is in conformance with the Master Plan Land Use Component.

2. The proposed rezone is compatible with the Master Plan Transportation Component and is consistent with the existing transportation infrastructure.

3. The proposed rezone is consistent with City of Elko Wellhead Protection Plan.

4. The proposed rezone is consistent with Elko City Code 3-2-4 (B) & (C)

5. The proposed rezone is in conformance with Section 3-2-10(B) C-General Commercial Zoning District.

6. The proposed rezone is consistent with Elko City Code 3-2-17

7. The property is located in a Floodzone and therefore compliance with Section 3-8 Floodplain Management is required for any new construction or substantial improvements.

STAFF RECOMMENDATION:

Staff recommends this item be **APPROVED**

CITY OF ELKO
Planning Department

Website: www.elkocity.com
Email: planning@elkocitynv.gov

1751 College Avenue · Elko, Nevada 89801 · (775) 777-7160 · Fax (775) 777-7219

November 30, 2021

Walsh Properties, LLC
Attn: Christina Walsh
774 Fir Street
Elko, NV 89801
Christinaassu@gmail.com

Re: Rezone No. 2-21 & Revocable Permit No. 5-21

Dear Applicant/Agent:

Enclosed is a copy of the agenda for an upcoming Planning Commission meeting. Highlighted on the agenda is the item or items that you have requested to be acted on at the meeting. Also enclosed is pertinent information pertaining to your request. Please review this information before the meeting.

The Planning Commission requests that you, or a duly appointed representative, be in attendance at this meeting to address the Planning Commission. If you will not be able to attend the meeting but wish to have a representative present, please submit a letter to the Planning Commission authorizing this person to represent you at the meeting.

To participate in the virtual meeting on a computer, laptop, tablet, or smart phone go to: https://global.gotomeeting.com/join/303168685. You can also dial in using your phone at **+1 (408) 650-3123** The **Access Code** for this meeting is **303-168-685.**

If you have any questions regarding this meeting, the information you received, or if you will not be able to attend this meeting, please call me at your earliest convenience at (775) 777-7160.

Sincerely,

Shelby Knopp

Shelby Knopp
Administrative Assistant

Enclosures

CC: Lana Carter, lanalcarter@live.com

Rezone 2-21 BARCA, LLC

YPNO	PANAME	PMADD1	PMADD2	PMCTST	PZIP
001392001	AGEE, DEL L & RUTH I		204 RIVER ST	ELKO, NV	89801-3647
001391005	ANALYTICAL SERVICES INC	C/O DAVIS, MARSHA	PO BOX 281620	LAMOILLE NV	89828-1620
001335006	AYALA, JOSE FILIBERTO ET AL		145 RIVER ST	ELKO NV	89801-3644
001391003	BARNET-MENDEZ, SARIT TR		PO BOX 223	ELKO NV	89803-0223
001392008	BASABE, MANUEL } 1pc		PO BOX 1354	ELKO NV	89803-1354
001392007	BASABE, MANUEL } 1pc		PO BOX 1354	ELKO NV	89803-1354
001391006	BELLA'S LLC		PO BOX 823351	VANCOUVER WA	98682-0069
001332001	BLACH DISTRIBUTING CO } 1pc		131 W MAIN ST	ELKO NV	89801-3698
001691008	BLACH INVESTMENT GROUP LLC } 1pc		131 W MAIN ST	ELKO NV	89801-3698
001334005	BLACH, ALAN GEORGE & JEANNE PAR		760 ASPEN TRL	RENO NV	89519-7947
001391012	BRIZUELA DE CISNEROS, SARA NOEM		105 DOUGLAS ST	ELKO NV	89801-3638
001334004	CASTANEDA, JESUS & ELIZABETH		3513 RIDGECREST DR	ELKO NV	89801-8497
001391004	DAVIS, MARSHA MILLARD TR		PO BOX 281620	LAMOILLE NV	89828-1620
001391011	DURAN, RUBENISAAC		1037 RIVER ST	ELKO NV	89801-3930
001335009	EDWARDS, RICHARD M		PO BOX 455	ELKO NV	89803-0455
001691009	ELKO CITY OF NOPC		1755 COLLEGE AVE	ELKO NV	89801
001391008	FLORES, RAMON & SOCORRO TR		821 DOUGLAS ST # 6	ELKO NV	89801-3865
001391007	GOICOECHEA, CARMEN TR		210 CASTLE WAY	WINNEMUCCA NV	89445-2638
001334006	HEWITT, DONALD R & KRISTINE L	C/O PRECISION MANAGEMENT	226 SILVER ST	ELKO NV	89801-3655
001334003	HOTEL WEST LLC	C/O LISA HACKETT	149 TWIN BRIDGES	SPRING CREEK NV	89815-8730
001335007	MURILLO, LUCIANO & MARIA J		2530 CINDY CIR	ELKO NV	89801-4444
001335002	NUGENT, MICHAEL P		2680 SW 9TH AVE	PARMA ID	83660-6209
001391009	NUNEZ, ALFREDO & MARICELA		149 DOUGLAS ST	ELKO NV	89801-3638
001335004	NUNEZ, ISMAEL RODRIGUEZ ET AL		702 LAST CHANCE RD UNIT 1	ELKO NV	89801-8748
001334001	ORMAZA PROPERTIES LLC		2063 ELLIS WAY	ELKO NV	89801-2673
001333005	ORMAZA SERIES(212 COMMERCIAL)LL } 1pc		PO BOX 339	ELKO NV	89803-0339
001333004	ORMAZA SERIES(212 COMMERCIAL)LL } 1pc		PO BOX 339	ELKO NV	89803-0339
001333003	ORMAZA SERIES(245 3RD)LLC } 1pc		PO BOX 339	ELKO NV	89803-0339
001335005	RODRIGUEZ, DAMIAN & ANA F		157 RIVER ST	ELKO NV	89801-3644
001335003	RODRIGUEZ, ISMAEL & YOLANDA		702 LAST CHANCE RD UNIT 1	ELKO NV	89801-8748
001391013	SAMPER, IVONE M ET AL		401 OAK ST	ELKO NV	89801-3546

001391002	SANDOVAL, JOSE R & MARIA R TR	175 N 1ST ST	BATTLE MOUNTAIN NV	89820-2892
001391001	SOARES, JOSEPH	102 RIVER ST	ELKO NV	89801-3645
001392004	SORIA, TOMAS PEREZ ET AL	248 RIVER ST	ELKO NV	89801-3647
001392003	TELLERIA, JOSE A } 1pc	220 RIVER ST	ELKO NV	89801-3647
001392002	TELLERIA, JOSE A	220 RIVER ST	ELKO NV	89801-3647
001335008	TORRES, IRINEO	125 RIVER ST	ELKO NV	89801-3644
001391010	VILLEGAS, JOSE MANUEL & MARTHA	364 MAPLE ST	ELKO NV	89801-3148

(32)

Post Marked 11/24/21

NOTICE OF PUBLIC HEARING

NOTICE IS HEREBY GIVEN that the Elko City Planning Commission will conduct a public hearing on Tuesday, December 7, 2021 beginning at 5:30 P.M. P.S.T. at Elko City Hall, 1751 College Avenue, Elko, Nevada, and that the public is invited to provide input and testimony on these matters under consideration in person, by writing, by representative, or via Gotomeeting.com.

The public can view or participate in the virtual meeting on a computer, laptop, tablet or smart phone at https://global.gotomeeting.com/join/303168685. You can also dial in using your phone. **+1 (408) 650-3123.** The **Access Code** for this meeting is **303-168-685.** Members of the public that do not wish to use GoToMeeting may call in at (775)777-0590. Comments can also be emailed to **planning@elkocitynv.gov**.

The specific item to be considered under public hearing format is:

- Rezone No. 2-21, filed by Walsh Properties, LLC, for a change in zoning from GI (General Industrial) to C (General Commercial) Zoning District, approximately 18,015 square feet of property, specifically APN 001-335-001, located generally on the south corner of the intersection of 2nd Street and W. Silver Street, more particularly described as:

  A parcel of land located in the City of Elko, Nevada, more particularly described as follows:
  Beginning at the centerline intersection of Silver Street and Second Street, being Corner No. 1, the True Point of Beginning;
  Thence S 48° 02' 29" E, 200.15 feet along the centerline of said Section Street to Corner No. 2, a point being the centerline intersection of Second Street and River Street;
  Thence S 41° 57' 30" W, 90.00 feet along the centerline of said River Street to Corner No. 3;
  Thence N 48° 02' 29" W, 200.18 feet to Corner No. 4, a point being on the centerline of said Silver Street;
  Thence N 41° 58' 28" E, 90.00 feet along the said centerline of Silver Street to Corner No. 1, the point of beginning, containing 18,015 Sq. Ft., more or less.
  Reference is hereby made to Exhibit B, Map to Accompany Zone Change Application for the Walsh Reclamation attached hereto and made a part hereof.

  The intent of the zone change is to allow a proposed commercial retail land use.

Additional information concerning this item may be obtained by contacting the Elko City Planning Department at (775) 777-7160.

ELKO CITY PLANNING COMMISSION

Cathy Laughlin

From: Christina Assu <christinaassu@gmail.com>
Sent: Monday, November 22, 2021 11:34 AM
To: Cathy Laughlin
Subject: Change in named application.

Hi Cathy, as per our conversation. 123 2nd street was purchased as Walsh Properties and I would like the rezone, revocable permit and parcel map applications changed from RARCA Llc to Walsh Properties as the applicant. Thanks and my apologies for my mistake.

Christina Walsh.
Walsh Properties llc

Sent from my iPhone

Doc # 797698
11/19/2021 3:05 PM
Official Record
Requested by
Stewart Title Elko
Elko County - NV
D. Mike Smales - Recorder
Pg 1 of 4 Fee: $37.00
Recorded By: STUTTLE RPTT:$877.50

A.P.N. No.:	001-335-001
R.P.T.T.	$ 877.00
File No.:	1438317
Recording Requested By:	
Stewart Title Company	
Mail Tax Statements To:	*Same as below*
When Recorded Mail To:	
Walsh Properties LLC	
774 Fir Street	
Elko, NV 89801	

GRANT, BARGAIN, SALE DEED

THIS INDENTURE WITNESSETH: That **Deed E. Harrison, D.C, an unmarried man and Shirleen S. Harrison, D.C., an unmarried woman** for valuable consideration, the receipt of which is hereby acknowledged, does hereby Grant, Bargain, Sell and Convey to **Walsh Properties LLC, a Nevada limited liability company**, all that real property situated in the County of Elko, State of Nevada, bounded and described as follows:

Lots 23 and 24 in Block A of THE CENTRAL ADDITION to the City of Elko, (formerly Town of Elko), County of Elko, State of Nevada, as the same appear upon the Official Map or Plat of said CENTRAL ADDITION to the said City of Elko on file in the office of the County Recorder of the County of Elko, State of Nevada on November 8, 1907 as Document No.3.

Also, a parcel of ground in the SE1/4SE1/4, Section 15, TOWNSHIP 34 NORTH, RANGE 55 EAST, M.D.B.&M., and further described as adjacent to Lot 24, Block A, CENTRAL ADDITION to the City of Elko (formerly Town of Elko) and more particularly described as follows:

Beginning at corner No. 1, which is also the East corner of Lot 24, Block A, CENTRAL ADDITION to the City of Elko, (formerly Town of Aura), according to the Official Map of said CENTRAL ADDITION on file in the office of Recorder of the County of Elko, State of Nevada;
THENCE North 41° 49© East, 14.00 feet to Corner No. 2;
THENCE North 48° 11© West, 100.00 feet to Corner No. 3;
THENCE South 41° 49© West, 14.00 feet to Corner No. 4, which is also the North corner of said Lot 24;
THENCE South 48° 11© East, 100.00 feet to Corner No. 1, the Place of Beginning.

The above metes and bounds legal description appeared previously in that certain Document recorded on January 28, 2009, as Document No. 608829, Official Records, pursuant to NRS Section 6. NRS 111.312.

APN: 001-335-001

(One inch Margin on all sides of Document for Recorder's Use Only)

*SUBJECT TO:
1. Taxes for the fiscal year;
2. Reservations, restrictions, conditions, rights, rights of way and easements, if any of record on said premises.

Together with all and singular the tenements, hereditaments and appurtenances thereunto belonging or in anywise appertaining, and any reversions, remainders, rents, issues or profits thereof.

Dated: 11-15th-2021 DEH

DEH

Deed E. Harrison, D.C

Shirleen S. Harrison, D.C.

State of Idaho)
) ss
County of Ada)

This instrument was acknowledged before me on the 15th day of November, 2021
By: Deed E. Harrison, D.C

Signature: _____
Notary Public

My Commission Expires: 12/05/2026

LANCE BOETTCHER
COMMISSION NUMBER 64708
NOTARY PUBLIC
State of Idaho
My Commission Expires 12/05/2026

*SUBJECT TO:
1. Taxes for the fiscal year;
2. Reservations, restrictions, conditions, rights, rights of way and easements, if any of record on said premises.

Together with all and singular the tenements, hereditaments and appurtenances thereunto belonging or in anywise appertaining, and any reversions, remainders, rents, issues or profits thereof.

Dated: 10-29-21

Deed E. Harrison, D.C

Shirleen S. Harrison, D.C.

State of _____)
) ss
County of)

This instrument was acknowledged before me on the _____ day of _____, 2021
By: Deed E. Harrison, D.C

Signature: _____
Notary Public

My Commission Expires: _____

Unofficial Copy

State of Idaho)
) ss
County of)
Ada

This instrument was acknowledged before me on the 29th day of October, 2021
By: Shirleen S. Harrison, D.C.

Signature: Douha Abdelhussein
Notary Public
Douha Abdelhussein
My Commission Expires: 4/19/2027

DOUHA ABDELHUSSEIN
Comm. No. 20211946
NOTARY PUBLIC
Expires: 04/19/2027
STATE OF IDAHO

UNOFFICIAL COPY

(One inch Margin on all sides of Document for Recorder's Use Only)

Doc # DV - 797698
11/19/2021 3:05 PM
Official Record
Requested by
Stewart Title Elko
Elko County - NV
D. Mike Smales - Recorder
Number of pages: 2 Fee: $37.00
Recorded By: STUTTLE RPTT:$877.50

STATE OF NEVADA
DECLARATION OF VALUE FORM

1. Assessor Parcel Number(s)
   a) 001-335-001
   b) _____
   c) _____
   d) _____
2. Type of Property:
   a. ☐ Vacant Land b. ☐ Single Fam. Res.
   c. ☐ Condo/Twnhse d. ☐ 2-4 Plex
   e. ☐ Apt. Bldg. f. ☒ Comm'l/Ind'l
   g. ☐ Agricultural h. ☐ Mobile Home
   ☐ Other _____

FOR RECORDERS OPTIONAL USE ONLY
Book_____ Page:_____
Date of Recording: _____
Notes:

3. a. Total Value/Sales Price of Property $ 225,000.00
   b. Deed in Lieu of Foreclosure Only (value of property) (_____)
   c. Transfer Tax Value: $ 225,000.00
   d. Real Property Transfer Tax Due $ 877.00

4. **If Exemption Claimed**:
   a. Transfer Tax Exemption per NRS 375.090, Section _____
   b. Explain Reason for Exemption: _____

5. Partial Interest: Percentage being transferred: 100%

The undersigned declares and acknowledges, under penalty of perjury, pursuant to NRS 375.060 and NRS 375.110, that the information provided is correct to the best of their information and belief, and can be supported by documentation if called upon to substantiate the information provided herein. Furthermore, the parties agree that disallowance of any claimed exemption, or other determination of additional tax due, may result in a penalty of 10% of the tax due plus interest at 1% per month. Pursuant to NRS 375.030, the Buyer and Seller shall be jointly and severally liable for any additional amount owed.

Signature _____ Capacity Grantor
Deed E. Harrison, D.C.

Signature _____ Capacity Grantee
Walsh Properties LLC

SELLER (GRANTOR) INFORMATION (REQUIRED)
Print Name: Deed E. Harrison, D.C and Shirleen S. Harrison, D.C.
Address: 4941 N. Meandor Place
City: Eagle
State: ID Zip: 83616

BUYER (GRANTEE) INFORMATION (REQUIRED)
Print Name: Walsh Properties LLC
Address: 774 Fir Street
City: Elko
State: NV Zip: 89801

COMPANY/PERSON REQUESTING RECORDING (required if not seller or buyer)
Print Name: Stewart Title Company Escrow # 1438317
Address: 810 Idaho St
City: Elko State: NV Zip: 89801

AS A PUBLIC RECORD THIS FORM MAY BE RECORDED/MICROFILMED

Doc # DV - 797698
11/19/2021 3:05 PM
Official Record
Requested by
Stewart Title Elko
Elko County - NV
D. Mike Smales - Recorder
Number of pages: 2 Fee: $37.00
Recorded By: STUTTLE RPTT:$877.50

STATE OF NEVADA
DECLARATION OF VALUE FORM

1. Assessor Parcel Number(s)
   a) 001-335-001
   b) _____
   c) _____
   d) _____
2. Type of Property:
   a. ☐ Vacant Land b. ☐ Single Fam. Res.
   c. ☐ Condo/Twnhse d. ☐ 2-4 Plex
   e. ☐ Apt. Bldg. f. ☒ Comm'l/Ind'l
   g. ☐ Agricultural h. ☐ Mobile Home
   ☐ Other _____

FOR RECORDERS OPTIONAL USE ONLY
Book_____ Page:_____
Date of Recording: _____
Notes:

3. a. Total Value/Sales Price of Property $ 225,000.00
   b. Deed in Lieu of Foreclosure Only (value of property) ( )
   c. Transfer Tax Value: $ 225,000.00
   d. Real Property Transfer Tax Due $ 877.00

4. **If Exemption Claimed**:
   a. Transfer Tax Exemption per NRS 375.090, Section _____
   b. Explain Reason for Exemption: _____

5. Partial Interest: Percentage being transferred: 100%

The undersigned declares and acknowledges, under penalty of perjury, pursuant to NRS 375.060 and NRS 375.110, that the information provided is correct to the best of their information and belief, and can be supported by documentation if called upon to substantiate the information provided herein. Furthermore, the parties agree that disallowance of any claimed exemption, or other determination of additional tax due, may result in a penalty of 10% of the tax due plus interest at 1% per month. Pursuant to NRS 375.030, the Buyer and Seller shall be jointly and severally liable for any additional amount owed.

Signature _____ Capacity Grantor
Deed E. Harrison, D.C.
Signature Craig Walsh Capacity Grantee
Walsh Properties LLC

SELLER (GRANTOR) INFORMATION (REQUIRED)
Print Name: Deed E. Harrison, D.C and Shirleen S. Harrison, D.C.
Address: 4941 N. Meandor Place
City: Eagle
State: ID Zip: 83616

BUYER (GRANTEE) INFORMATION (REQUIRED)
Print Name: Walsh Properties LLC
Address: 774 Fir Street
City: Elko
State: NV Zip: 89801

COMPANY/PERSON REQUESTING RECORDING (required if not seller or buyer)
Print Name: Stewart Title Company Escrow # 1438317
Address: 810 Idaho St
City: Elko State: NV Zip: 89801

AS A PUBLIC RECORD THIS FORM MAY BE RECORDED/MICROFILMED

CITY OF ELKO PLANNING DEPARTMENT
1751 College Avenue * Elko * Nevada * 89801
(775) 777-7160 phone * (775) 777-7219 fax

APPLICATION FOR ZONE CHANGE

APPLICANT(s):	RARCA LLC
MAILING ADDRESS:	774 Fir St. Elko, NV 89801
PHONE NO (Home)	775-385-4538 **(Business)** 775-778-0303
NAME OF PROPERTY OWNER (If different):	RARCA LLC / Walsh
(Property owner's consent in writing must be provided.)	
MAILING ADDRESS:	774 Fir St. Elko, NV 89801
LEGAL DESCRIPTION AND LOCATION OF PROPERTY INVOLVED (Attach if necessary):	
ASSESSOR'S PARCEL NO.:	001-335-001 **Address** 123 2nd St. Elko, NV
Lot(s), Block(s), &Subdivision	
Or Parcel(s) & File No.	

FILING REQUIREMENTS:

Complete Application Form: In order to begin processing the application, an application form must be complete and signed. *Complete* applications are due at least 21 days prior to the next scheduled meeting of the Elko City Planning Commission (meetings are the 1st Tuesday of every month).

Fee: A $500.00 non-refundable filing fee.

Area Map: A map of the area proposed for this zone change must be provided.

Plot Plan: A plot plan provided by a properly licensed surveyor depicting the existing condition drawn to scale showing property lines, existing and proposed buildings, building setbacks, distances between buildings, parking and loading areas, driveways and other pertinent information must be provided.

Legal Description: A complete legal description of the boundary of the proposed zone change must be provided as well as a map depicting the area to be changed stating the wording: area to be changed from "x" to "x"; (LI to R, for example).

Note: One .pdf of the entire application must be submitted as well as one set of legible, reproducible plans 8 ½" x 11" in size. If the applicant feels the Commission needs to see 24" x 36" plans, 10 sets of pre-folded plans must be submitted.

Other Information: The applicant is encouraged to submit other information and documentation to support this Rezone Application.

RECEIVED
NOV 15 2021

1. Identify the existing zoning classification of the property:
GI

2. Identify the zoning Classification being proposed/requested:
Commercial

3. Explain in detail the type and nature of the use anticipated on the property:
Retail
Furniture, Home Decor, GIFTS.

4. Explain how the proposed zoning classification relates with other zoning classifications in the area:
The area surrounding this parcel and within a few blocks there are properties zoned C- General Commercial / LI- Light Industrial and IC - Industrial Commercial zoning district is adjacent to this parcel and proposed use fits with other uses in area.

5. Identify any unique physical features or characteristics associated with the property:
No, The property is already developed with a building and associated parking.

(Use additional pages if necessary to address questions 3 through 5)

By My Signature below:

☑ I consent to having the City of Elko Staff enter on my property for the sole purpose of inspection of said property as part of this application process.

☑ I object to having the City of Elko Staff enter onto my property as a part of their review of this application. (Your objection will not affect the recommendation made by the staff or the final determination made by the City Planning Commission or the City Council.)

☑ I acknowledge that submission of this application does not imply approval of this request by the City Planning Department, the City Planning Commission and the City Council, nor does it in and of itself guarantee issuance of any other required permits and/or licenses.

☑ I acknowledge that this application may be tabled until a later meeting if either I or my designated representative or agent is not present at the meeting for which this application is scheduled.

☑ I have carefully read and completed all questions contained within this application to the best of my ability.

Applicant / Agent RARECA LLC Christina Walsh
(Please print or type)

Mailing Address 774 Fir ST
Street Address or P.O. Box

Elko NV 89801
City, State, Zip Code

Phone Number: 775 345 4538

Email address: Christinaassu@gmail.com

SIGNATURE: Walsh

FOR OFFICE USE ONLY

File No.: 2-21 **Date Filed:** 11/15/21 **Fee Paid:** $500 CK# 0114

RECEIVED
NOV 15 2021

I, Christina Walsh, give permission to *Lana Carter* to represent me at the Planning Commission for the rezone of 123 2nd St. Elko, NV 89801.

Christina Walsh
Date: 11/12/2021

Shelby Knopp

From: Scott A. Wilkinson
Sent: Monday, November 15, 2021 9:42 AM
To: Cathy Laughlin
Cc: Shelby Knopp
Subject: RE: Permit approval

It looks like Deed Harrison approved the application. Correct?

Scott A. Wilkinson
Assistant City Manager
City of Elko
Telephone: 775.777.7211
Email: sawilkinson@elkocitynv.gov

From: Cathy Laughlin
Sent: Monday, November 15, 2021 8:26 AM
To: Scott A. Wilkinson <sawilkinson@elkocitynv.gov>
Cc: Shelby Knopp <sknopp@elkocitynv.gov>
Subject: FW: Permit approval

Scott,
Walsh properties would like to meet the deadline for the December PC meeting for the rezone, they have also submitted a revocable permit application. They were going to close last week but the seller did not make it back from hunting so they are closing sometime this week. Will this email work for the permission from the owner to allow them to apply even though they will own the property before the PC meeting?

Cathy Laughlin
City Planner

(775)777-7160 ph
(775)777-7219 fax
claughlin@elkocitynv.gov

City of Elko
1751 College Avenue
Elko, NV 89801

From: Christina Assu [mailto:christinaassu@gmail.com]
Sent: Friday, November 12, 2021 6:16 PM
To: Cathy Laughlin <lesaka@frontiernet.net>; Cathy Laughlin <claughlin@elkocitynv.gov>
Subject: Fwd: Permit approval

Sent from my iPhone

Begin forwarded message:

From: dustyshipp@gmail.com
Date: November 12, 2021 at 5:15:42 PM PST
To: Christina Walsh <CHRISTINAWALSH.REALTOR@gmail.com>
Subject: Fwd: Permit approval

Begin forwarded message:

> **From:** "Shirlene Harrison, DC" <shirleneharrison@gmail.com>
> **Date:** November 12, 2021 at 2:58:29 PM PST
> **To:** Deed Harrison <drdeedharrison@gmail.com>
> **Cc:** Harrison Shirleen <drshirlene@idealspine.com>, dustyshipp@gmail.com
> **Subject: Re: Permit approval**
>
> Ok
>
> On Fri, Nov 12, 2021 at 3:50 PM Deed Harrison <drdeedharrison@gmail.com> wrote:
>
> > That's fine by me. Thank you.
> >
> > Deed
> >
> > Sent from my iPhone
> >
> > > On Nov 12, 2021, at 3:47 PM, dustyshipp@gmail.com wrote:
> > >
> > > Good afternoon. The buyer is wanting to submit the application on Monday for permits. There is a deadline for this that needs to be done for them. Because of our extension I would like to make sure that we request your approval in this matter. This has nothing to do with the purchase and no work will commence on the property obviously prior to close but I would like to make sure that you guys are OK that they submit the applications and plans to the city to get the permitting process started.
> > >
> > > Thanks
> > > Dusty Shipp
> > > 775-934-5785
>
> --
> Yours In Health,
>
> ***Shirlene Harrison, DC***
> Ideal Spine Health Center, PLLC
> 950 E Riverside Dr
> Eagle, ID 83616
> 208.939.2502

RECEIVED
NOV 15 2021

EXHIBIT A
ZONING CHANGE FOR WALSH RECLAMATION
November 9, 2021

A parcel of land located in the City of Elko, Nevada, more particularly described as follows:

Beginning at the centerline intersection of Silver Street and Second Street, being Corner No. 1, the True Point of Beginning;

Thence S 48° 02' 29" E, 200.15 feet along the centerline of said Second Street to Corner No. 2, a point being the centerline intersection of Second Street and River Street;

Thence S 41° 57' 30" W, 90.00 feet along the centerline of said River Street to Corner No. 3;

Thence N 48° 02' 29" W, 200.18 feet to Corner No. 4, a point being on the centerline of said Silver Street;

Thence N 41° 58' 28" E, 90.00 feet along the said centerline of Silver Street to Corner No. 1, the point of beginning, containing 18,015 Sq. Ft., more or less.

Reference is hereby made to Exhibit B, Map to Accompany Zone Change Application for the Walsh Reclamation attached hereto and made a part hereof.

PROFESSIONAL LAND SURVEYOR STATE OF NEVADA
ROBERT E. MORLEY
Exp. 12 - 31 - 21
No. 6203
11/15/2021

RECEIVED

NOV 15 2021

EXHIBIT B
MAP TO ACCOMPANY ZONE CHANGE APPLICATION FOR WALSH RECLAMATION

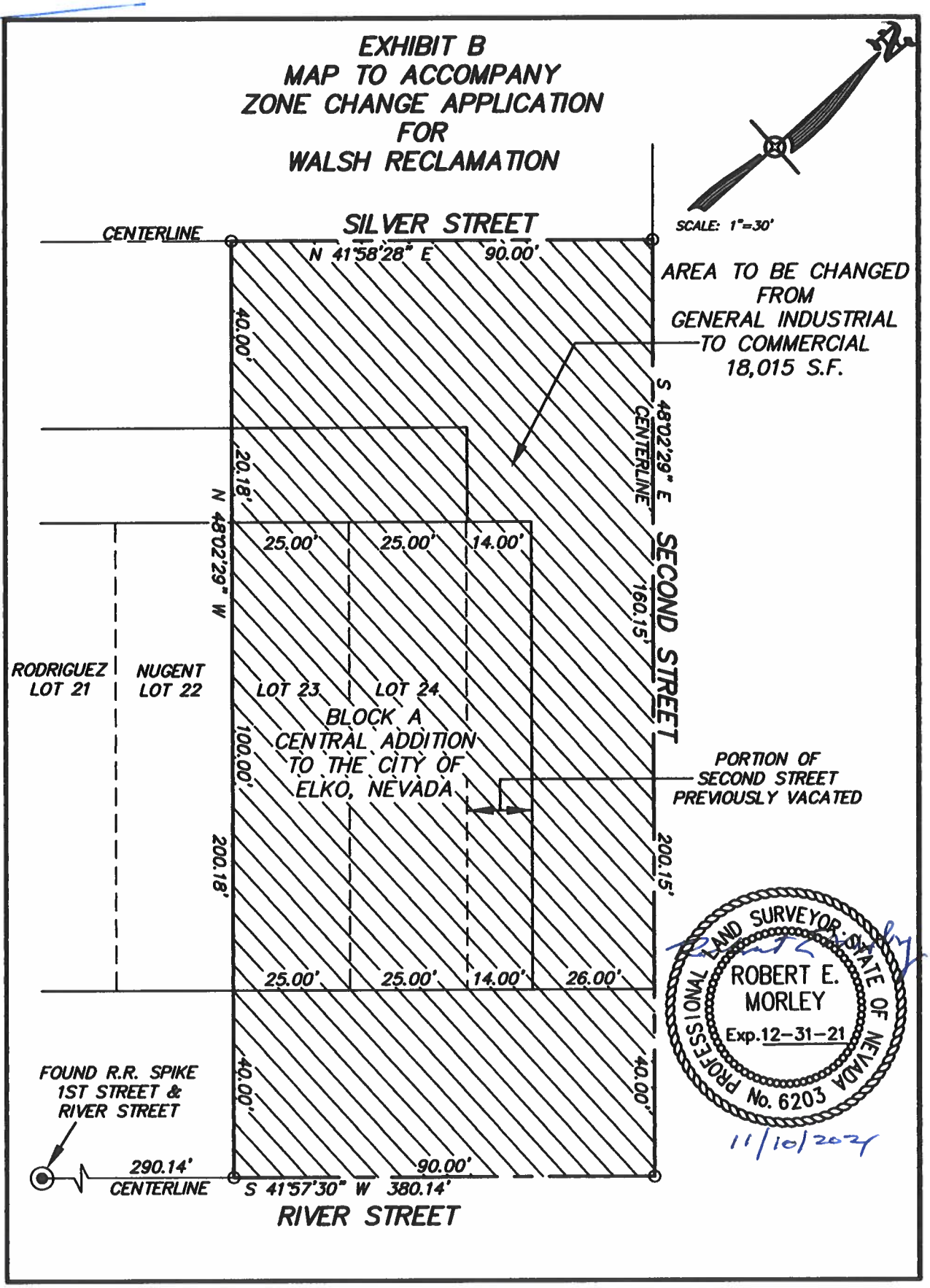

SITE PLAN FOR WALSH RECLAMATION

BLOCK A, CENTRAL ADDITION
TO THE CITY OF ELKO, NEVADA

PROFESSIONAL LAND SURVEYOR STATE OF NEVADA
ROBERT E. MORLEY
Exp. 12-31-21
No. 6203

11/9/2021

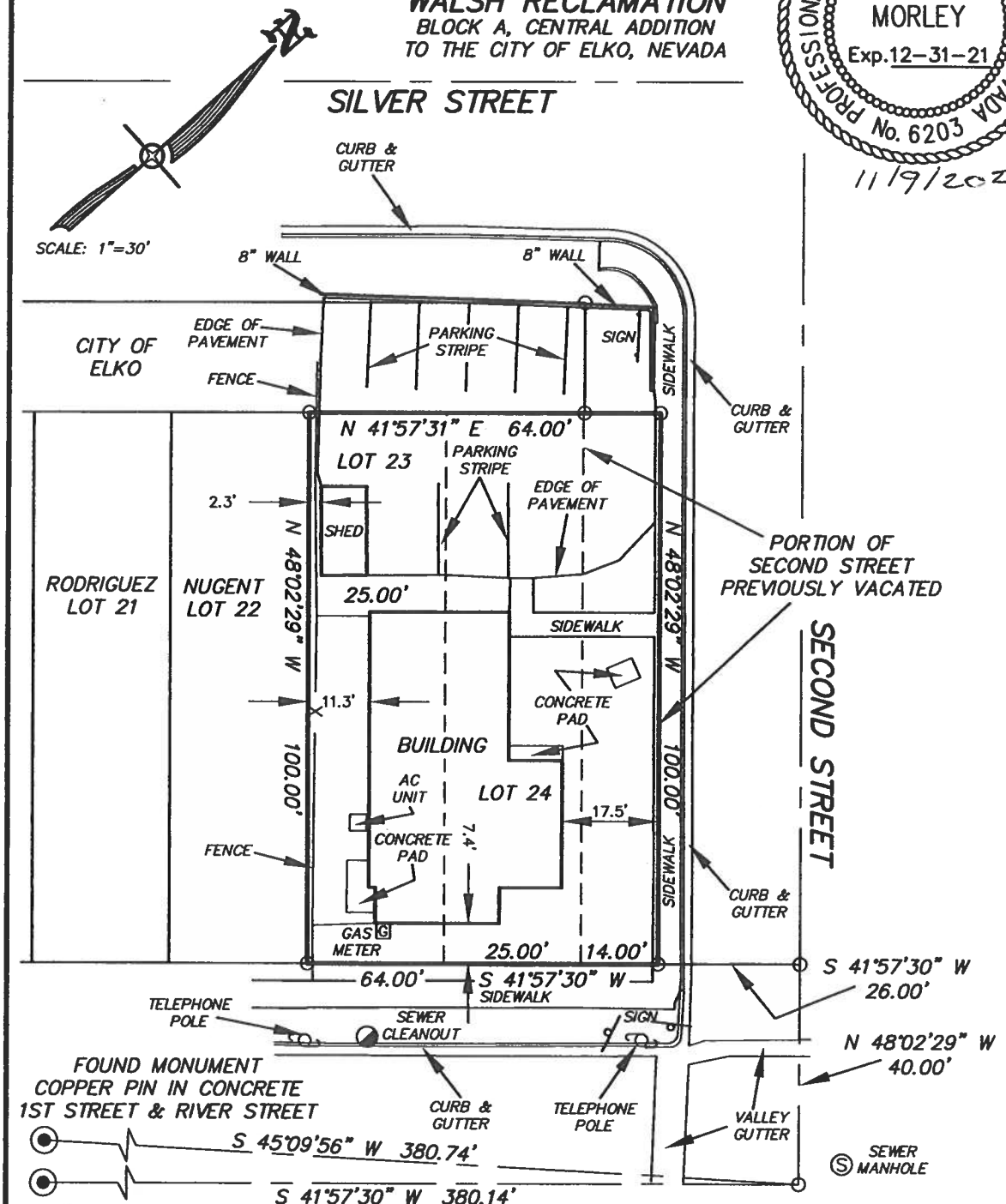

Elko City Planning Commission
Agenda Action Sheet

1. **Review, consideration and possible approval of Final Map No. 5-21, filed by Bailey and Associates, LLC for the development of a subdivision entitled Cedar Estates Phase 3 involving the proposed division of approximately 7.31 acres of property into 34 lots for residential development within the RMH (Residential Mobile Home) Zoning District, and matters related thereto. FOR POSSIBLE ACTION**

2. Meeting Date: **December 7, 2021**

3. Agenda Category: ***NEW BUSINESS***

4. Time Required: **10 Minutes**

5. Background Information: **Subject property is located at the northern terminus of both Primrose Lane and Daisy Drive. (APN 001-926-111)**

6. Business Impact Statement: **Not Required**

7. Supplemental Agenda Information: **Staff Report, Approved Construction Plans, Application**

8. Recommended Motion: **Recommend that the City Council accept, on behalf of the public, the parcels of land offered for dedication for public use in conformity with the terms of the offer of dedication; that the final map substantially complies with the tentative map; that the City Council approve the agreement to install improvements in accordance with the approved construction plans that satisfies the requirements of Title 2 Chapter 3, and conditionally approve Final Map 5-21 with findings and conditions listed in the Staff Report dated November 10, 2021.**

9. Findings: **See Staff Report dated November 10, 2021**

10. Prepared By: **Michele Rambo, AICP, Development Manager**

11. Agenda Distribution: **Bailey & Associates, LLC**
Attn: Sheldon Hetzel
780 W. Silver Street, #104
Elko, NV 89801

Summit Engineering
Attn: Nitin Bhakta
1150 Lamoille Highway
Elko, NV 89801

STAFF COMMENT FLOW SHEET
PLANNING COMMISSION AGENDA DATE: 12/7
Do not use pencil or red pen, they do not reproduce

Title: Final Map No. 5-21 - Cedar Estates - Phase 3
Applicant(s): Bailey + Associates, LLC
Site Location: N Terminus of Primrose Ln + Daisy Drive
Current Zoning: RMH Date Received: 10/25/21 Date Public Notice: N/A
COMMENT: This is to divide ≈ 7.31 acres into 34 lots for residential development.

If additional space is needed please provide a separate memorandum

Assistant City Manager: Date: 11/19/21
Recommend approval as presented by staff

SAW
Initial

City Manager: Date: 11/22/2021
No comments/concerns. Recommend approval.

cc
Initial

City of Elko
1751 College Avenue
Elko, NV 89801
(775) 777-7160
FAX (775) 777-7119

CITY OF ELKO STAFF REPORT

REPORT DATE:	**November 10, 2021**
PLANNING COMMISSION DATE:	**December 7, 2021**
AGENDA ITEM NUMBER:	**I.B.1.**
APPLICATION NUMBER:	**Final Map 5-21**
APPLICANT:	**Bailey and Associates, LLC**
PROJECT DESCRIPTION:	**Cedar Estates Phase 3**

A Final Map for the division of approximately 7.31 acres into 34 lots for residential development within an RMH (Residential Mobile Home) zoning district.

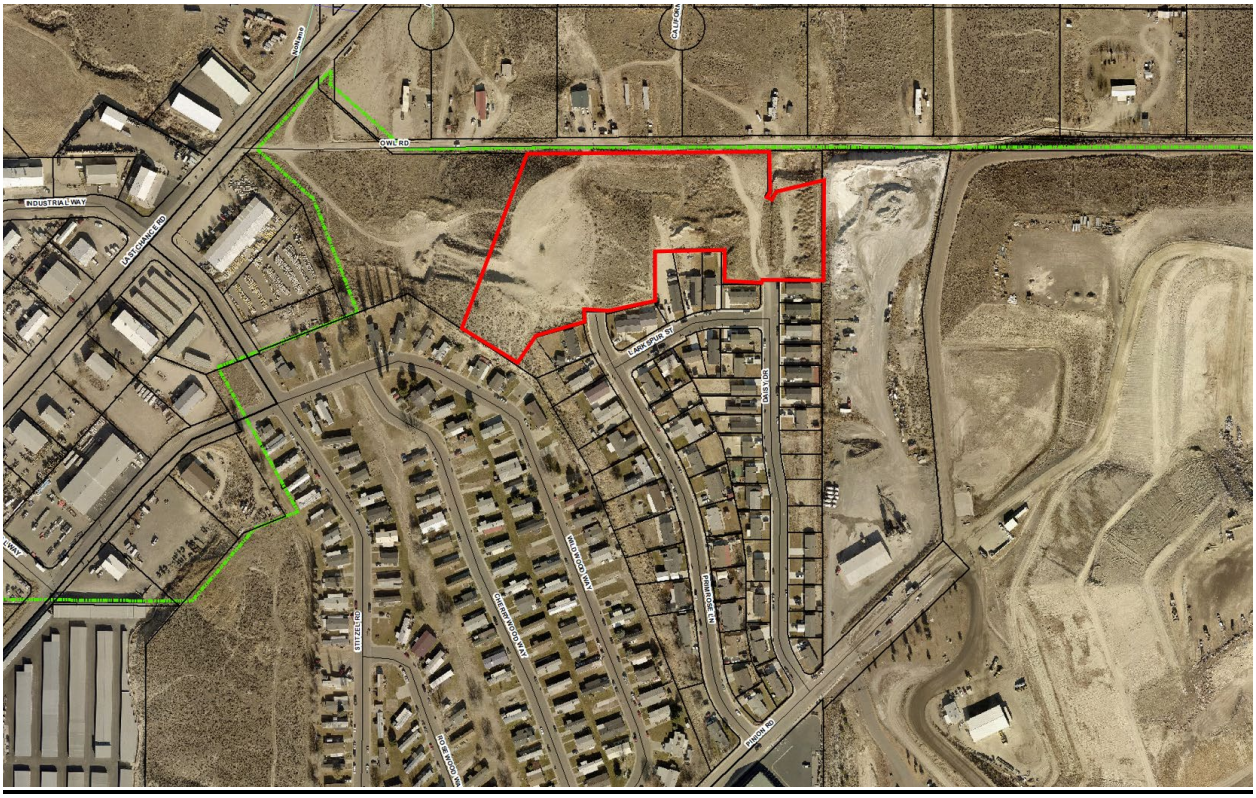

STAFF RECOMMENDATION:

RECOMMEND CONDITIONAL APPROVAL, subject to findings of fact, and conditions as stated in this report.

PROJECT INFORMATION

PARCEL NUMBER: 001-926-111

PARCEL SIZE: 7.31 Acres

EXISTING ZONING: (RMH) Residential Mobile Home

MASTER PLAN DESIGNATION: (RES-MD) Residential Medium Density

EXISTING LAND USE: Vacant

BACKGROUND:

1. The Final Map for Cedar Estates Phase 3 has been presented before expiration of the subdivision proceedings in accordance with NRS 278.360(1)(a)(2) and City code.
2. The Planning Commission reviewed and recommended a conditional approval to the City Council on the Zephyr Heights Tentative Map on July 6, 2021.
3. The City Council conditionally approved the Cedar Estates Phase 3 Tentative Map on July 27, 2021.
4. The subdivision is located on APN 001-926-111.
5. The proposed subdivision consists of 34 residential lots.
6. The total subdivided area is approximately 7.31 acres.
7. The proposed density is 4.65 units per acre.
8. Approximately 1.08 acres are offered for dedication for street development.
9. Drainage and utility easements are provided along all lot lines.
10. The property is located at the northern terminus of both Primrose Lane and Daisy Drive.

NEIGHBORHOOD CHARACTERISTICS:

The property is surrounded by:

- North: Agricultural-Residential (AR) / Developed (Elko County)
- South: Residential Mobile Home (RMH) / Developed (Cedar Estates Phases 1 and 2)
- East: General Industrial (GI) / Developed
- West: Light Industrial (LI) / Vacant
  Residential Mobile Home (RMH) / Developed

PROPERTY CHARACTERISTICS:

- The property is an undeveloped residential parcel.
- The site abuts large-lot residential uses to the north, existing Cedar Estates Phases 1 and 2 to the south, a developed industrial use (Humboldt-Vega) to the east, and an existing mobile home park (Southgate Mobile Home Park) to the west.
- The parcel has many slopes, but generally drains to the existing detention/retention basin on the northeast corner of the site. The slopes have been incorporated into the tentative map design where possible to minimize the amount of grading needed.
- The property will be accessed by both Primrose Lane and Daisy Drive.

APPLICABLE MASTER PLAN AND CITY CODE SECTIONS:

- City of Elko Master Plan – Land Use Component
- City of Elko Master Plan – Transportation Component
- City of Elko Redevelopment Plan
- City of Elko Wellhead Protection Plan
- City of Elko Zoning – Section 3-3-7 Final Map State (Stage III)
- City of Elko Zoning – Section 3-3-8 Content and Format of Final Map Submittal
- City of Elko Zoning – Section 3-3-9 to 3-3-16 (Inclusive) Subdivision Design Standards
- City of Elko Zoning – Section 3-3-17 to 3-3-22 (Inclusive) Public Improvements/ Guarantees
- City of Elko Zoning – Section 3-2-3, 3-2-4, 3-5-4, and 3-2-17 Zoning Code Standards
- City of Elko Zoning – Section 3-8 Flood Plain Management

MASTER PLAN - Land use:

Conformance with the Land Use component of the Master Plan was evaluated with review and approval of the Tentative Map. The Final Map is in conformance with the Tentative Map.

Therefore, the proposed subdivision is in conformance with the Land Use Component of the Master Plan.

MASTER PLAN - Transportation:

Conformance with the Transportation component of the Master Plan was evaluated with review and approval of the Tentative Map. The Final Map is in conformance with the Tentative Map.

Therefore, the proposed subdivision is in conformance with the Transportation Component of the Master Plan.

ELKO REDEVELOPMENT PLAN:

The property is not located within the Redevelopment Area.

ELKO WELLHEAD PROTECTION PLAN:

The northwest corner of the property is located within the 30-year capture zone for Well 24. Development of the site is required to be connected to a programmed sewer system and all street drainage will be directed to a detention/retention basin.

As the project is designed, it does not present a hazard to City wells.

SECTION 3-3-7 FINAL MAP STAGE (STAGE III):

Pre-submission Requirements (C)(1) – The Final Map is in conformance with the zoning requirements.

Pre-submission Requirements (C)(2) – The proposed Final Map conforms to the Tentative Map.

SECTION 3-3-8 CONTENT AND FORMAT OF FINAL MAP SUBMITTAL:

A. Form and Content – The Final Map conforms to the required size specifications and provides the appropriate affidavits and certifications.
B. Identification Data
    1. The Final Map identifies the subdivision and provides its location by section, township, range, and county.
    2. The Final Map was prepared by a properly licensed surveyor.
    3. The Final Map provides a scale, north arrow, and date of preparation.
C. Survey Data
    1. The boundaries of the subdivision are fully balanced and closed.
    2. Any exceptions are noted on the Final Map.
    3. The Final Map is tied to a section corner.
    4. The location and description of any physical encroachments upon the boundary of the subdivision are noted on the Final Map.
D. Descriptive Data
    1. The name, right-of-way lines, courses, lengths, and widths of all streets and easements are noted on the Final Map.
    2. All drainage ways are noted on the Final Map.
    3. All utility and public service easements are noted on the Final Map.
    4. The location and dimensions of all lots, parcels, and exceptions are shown on the Final Map.
    5. All residential lots are numbered consecutively on the Final Map.
    6. There are no sites dedicated to the public shown on the Final Map.
    7. The locations of adjoining subdivisions are noted on the Final Map with required information.
    8. There are no deed restrictions proposed.
E. Dedication and Acknowledgment
    1. The owner's certificate has the required dedication information for all easements and right-of-ways.
    2. The execution of dedication is acknowledged with space to be certified by a notary public.
F. Additional Information
    1. All centerline monuments for streets are noted as being set on the Final Map.
    2. The centerline and width of each right-of-way is noted on the Final Map.
    3. The Final Map indicates the location of monuments that will be set to determine the boundaries of the subdivision.
    4. The length and bearing of each lot line is identified on the Final Map.
    5. The Final Map is located adjacent to a city boundary, which is identified.
    6. The Final Map identifies the location of the section lines nearest the property.
G. City to Check
    1. Closure calculations have been provided. Civil improvement plans have been approved. Drainage plans have been approved. An engineer's estimate has been provided.
    2. The lot closures are within the required tolerances.
H. Required Certifications
    1. The Owner's Certificate is shown on the Final Map.

2. The Owner's Certificate offers for dedication all right-of-ways shown on the Final Map.
3. A Clerk Certificate is shown on the Final Map, certifying the signature of the City Council.
4. The Owner's Certificate offers for dedication all easements shown on the Final Map.
5. A Surveyor's Certificate is shown on the Final Map and provides the required language.
6. The City Engineer's Certificate is shown on the Final Map.
7. A certificate from the Nevada Division of Environmental Protection is provided with the required language.
8. The engineer of record has submitted the Tentative Map and construction plans to the state, but no written approval has been received.
9. A certificate from the Division of Water Resources is provided on the Final Map with the required language.
10. The construction plans identify the required water meters for the subdivision.

SECTION 3-3-9 THROUGH 3-3-16 (INCLUSIVE)

The proposed subdivision was evaluated for conformance to the referenced sections of code during the Tentative Map process.

The proposed development conforms with these sections of City code.

SECTION 3-3-17 RESPONSIBILITY FOR PUBLIC IMPROVEMENTS

The subdivider shall be responsible for all required improvements in conformance with this section of City code.

SECTION 3-3-18 CONSTRUCTION PLANS

The subdivider has submitted plans to the city and state agencies for review to receive all required permits in accordance with this section of City code. The plans have been approved by City staff.

SECTION 3-3-19 CONSTRUCTION AND INSPECTION

The subdivider has submitted plans to the city and state agencies for review to receive all permits in accordance with this section of City code.

SECTION 3-3-20 REQUIRED IMPROVEMENTS

The subdivider has submitted civil improvement plans which are in conformance with this section of City code.

Civil improvements include curb, gutter, and sidewalk as well as lighting, USPS gang boxes, paving, and utilities within the Daisy Drive and Primrose Lane rights-of-way.

SECTION 3-3-21 AGREEMENT TO INSTALL IMPROVEMENTS

The subdivider will be required to enter into a Performance Agreement to conform to this section of City code.

SECTION 3-3-22 PERFORMANCE AND MAINTENANCE GUARANTEES

The subdivider will be required to provide a Performance and Maintenance Guarantee as stipulated in the Performance Agreement in conformance with this section of City code.

SECTIONS 3-2-3, 3-2-4, 3-5-4, AND 3-2-17

The proposed subdivision was evaluated for conformance to the referenced sections of code during the Tentative Map process.

The proposed development conforms with these sections of City code.

SECTION 3-8 FLOODPLAIN MANAGEMENT:

This parcel is not located in a Special Flood Hazard Area (SFHA).

FINDINGS

1. The Final Map for Cedar Estates Phase 3 has been presented before expiration of the subdivision proceedings in accordance with NRS 278.360(1)(a)(2) and City code.

2. The Final Map is in conformance with the Tentative Map.

3. The proposed subdivision is in conformance with the Land Use and Transportation Components of the Master Plan.

4. The proposed development conforms with Sections 3-3-9 through 3-3-16 (inclusive).

5. The Subdivider shall be responsible for all required improvements in conformance with Section 3-3-17 of City code.

6. The Subdivider has submitted construction plans in conformance with Section 3-3-18 of City code.

7. The Subdivider has submitted plans to the city and state agencies for review to receive all required permits in accordance with the requirements of Section 3-3-19 of City code.

8. The Subdivider has submitted construction plans which, having been found to be in conformance with Section 3-3-20 of City code, have been approved by City staff.

9. The Subdivider will be required to enter into a Performance Agreement to conform to Section 3-3-21 of City code.

10. The Subdivider will be required to provide a Performance and Maintenance Guarantee as stipulated in the Performance Agreement in conformance with Section 3-3-22 of City code.

11. The proposed development conforms to Sections 3-2-3, 3-2-4, 3-5-4, 3-2-17, and 3-8 of City code.

STAFF RECOMMENDATION/CONDITIONS OF APPROVAL:

Staff recommends this item be **conditionally approved** with the following conditions:

Development Department:

1. The Developer shall execute a Performance and Maintenance Agreement in accordance with Section 3-3-21 of City code. The Performance Agreement shall be secured in accordance with Section 3-3-22 of City code. In conformance with Section 3-3-21 of City code, the public improvements shall be completed within a time of no later than two (2) years of the date of Final Map approval by the City Council unless extended as stipulated in City code.

2. The Performance and Maintenance Agreement shall be approved by the City Council.

3. The Developer shall enter into the Performance and Maintenance Agreement within 30 days of approval of the Final Map by the City Council.

4. The Final Map for Cedar Estates Phase 3 is approved for 34 residential lots.

5. The Utility Department will issue a Will Serve Letter for the subdivision upon approval of the Final Map by the City Council.

6. Site disturbance shall not commence prior to approval of the project's construction plans by the Nevada Department of Environmental Protection.

7. Site disturbance, including clearing and grubbing, shall not commence prior to the issuance of a grading permit by the City of Elko.

8. Construction shall not commence prior to Final Map approval by the City Council and issuance of a will-serve letter by the City of Elko.

9. Conformance with the conditions of approval of the Tentative Map is required.

10. The Owner/Developer is to provide the appropriate contact information for the qualified engineer and engineering firm contracted to oversee the project along with the required inspection and testing necessary to produce an As-Built for submittal to the City of Elko. The Engineer of Record is to ensure all materials meet the latest edition of the Standard Specifications for Public Works. The Engineer of Record is to certify that the project was completed in conformance with the approved plans and specifications.

11. Any/All slopes greater than 3:1 shall be permanently stabilized prior to acceptance of any public improvements by the City Council.

Public Works Department:

12. All public improvements to be constructed per City of Elko code at time of development.

CITY OF ELKO
Planning Department

Website: www.elkocity.com
Email: planning@elkocitynv.gov

1751 College Avenue · Elko, Nevada 89801 · (775) 777-7160 · Fax (775) 777-7219

November 30, 2021

Bailey & Associates, LLC
Attn: Sheldon Hetzel
780 W. Silver Street, #104
Elko, NV 89801
sheldon.springcreek@gmail.com

Re: Rezone No. 2-21 & Revocable Permit No. 5-21

Dear Applicant/Agent:

Enclosed is a copy of the agenda for an upcoming Planning Commission meeting. Highlighted on the agenda is the item or items that you have requested to be acted on at the meeting. Also enclosed is pertinent information pertaining to your request. Please review this information before the meeting.

The Planning Commission requests that you, or a duly appointed representative, be in attendance at this meeting to address the Planning Commission. If you will not be able to attend the meeting but wish to have a representative present, please submit a letter to the Planning Commission authorizing this person to represent you at the meeting.

To participate in the virtual meeting on a computer, laptop, tablet, or smart phone go to: https://global.gotomeeting.com/join/303168685. You can also dial in using your phone at **+1 (408) 650-3123** The **Access Code** for this meeting is **303-168-685.**

If you have any questions regarding this meeting, the information you received, or if you will not be able to attend this meeting, please call me at your earliest convenience at (775) 777-7160.

Sincerely,

Shelby Knopp

Shelby Knopp
Administrative Assistant

Enclosures

CC: Summit Engineering, Attn: Nitin Bhakta, 1150 Lamoille Hwy, Elko, NV 89801
nitin@summitnv.com

CITY OF ELKO
Planning Department

Website: www.elkocitynv.gov
Email: planning@elkocitynv.gov

1751 College Avenue · Elko, Nevada 89801 · (775) 777-7160 · Fax (775) 777-7219

November 4, 2021

Elko County Planning and Zoning
540 Court Street, Suite 104
Elko, NV 89801

Re: Final Map No. 05-21 / Cedar Estates – Phase 3 Subdivision

In accordance with the Communication Policy between the City of Elko and Elko County, the City of Elko hereby notices and advises the Board of County Commissioners of the County of Elko of the City's intention to consider a subdivision Final Map for division of approximately 7.31 acres of land into 34 lots. Please find enclosed a copy of the Final Map for your review and comment.

The subject property is located generally north of the terminus of Daisy Drive and Primrose Lane.

Review by the Elko City Planning Commission is scheduled for their December 7, 2021, regular meeting.

Please submit written comments to the Elko City Planning Department. If we do not receive written comments prior to the scheduled meeting, we will assume you have no concerns regarding this application.

Thank you for your attention to this matter.

Sincerely,

Shelby Knopp
Administrative Assistant

Enclosures

City of Elko – Development Department
1755 College Avenue
Elko, NV 89801
Telephone: 775.777.7210
Facsimile: 775.777.7219

October 27, 2021

Bailey & Associates
Attn: Sheldon Hetzel
780 W Silver Street, #104
Elko, NV 89801

Re: Cedar Estates Phase 3 Final Map – Complete Submittal

Dear Mr. Bhakta:

The City of Elko has reviewed your Final Map application materials for Cedar Estates Phase 3 (submitted October 25, 2021) and has found them to be complete. We will now begin processing your application by transmitting the materials to other City departments for their review. You may receive further comments or corrections as these reviews progress. Barring any complications, this Final Map will be scheduled for Planning Commission on December 7, 2021 and City Council on December 14, 2021.

I will keep you updated on the status of your application, but please feel free to contact me at (775) 777-7217 if you have any questions.

Sincerely,

Michele Rambo

Michele Rambo, AICP
Development Manager
mrambo@elkocitynv.gov

CC: Summit Engineering
Attn: Nitin Bhakta
1150 Lamoille Highway
Elko, NV 89801

City of Elko – File

CITY OF ELKO PLANNING DEPARTMENT
1751 College Avenue * Elko * Nevada * 89801
(775) 777-7160 * (775) 777-7219 fax

APPLICATION FOR FINAL PLAT APPROVAL

APPLICANT(s):	Bailey & Associates LLC
MAILING ADDRESS:	780 W. Silver St., Suite 104, Elko, NV 89801
PHONE NO (Home)	**(Business)** 775-777-7773
NAME OF PROPERTY OWNER (If different):	
(Property owner consent in writing must be provided)	
MAILING ADDRESS:	
LEGAL DESCRIPTION AND LOCATION OF PROPERTY INVOLVED (Attach if necessary):	
ASSESSOR'S PARCEL NO.:	001926111 **Address** 0 Daisy Dr.
Lot(s), Block(s), &Subdivision	
Or Parcel(s) & File No.	
PROJECT DESCRIPTION OR PURPOSE:	Subdivision of 34 Lots for Manufactured Homes on permanent foundations.
APPLICANT'S REPRESENTATIVE OR ENGINEER:	Sheldon F. Hetzel

FILING REQUIREMENTS:

Complete Application Form: In order to begin processing the application, an application form must be complete and signed. *Complete* applications are due at least 21 days prior to the next scheduled meeting of the Elko City Planning Commission (meetings are the 1st Tuesday of every month), and must include the following:

1. One .pdf of the entire application, and ten (10) 24" x 36" copies of the final plat folded to a size not to exceed 9"x12" provided by a properly licensed surveyor, as well as one (1) set of reproducible plans 8 ½" x 11" in size and any required supporting data, prepared in accordance with Section 3-3-8 of Elko City Code (see attached checklist).
2. Pre-Submission Requirements:
    a. The final plat shall meet all requirements of the zoning district in which located, and any necessary zoning amendment shall have been adopted by the Elko City Council prior to filing of the final plat.
    b. The final plat shall conform closely to the approved preliminary plat and be prepared in accordance with the provisions of the City Subdivision Ordinance.
    c. The final plat submittal shall include a letter signifying approval of utility easements by all public utilities involved, and shall be so indicated by an affidavit on the map.
    d. A complete set of construction plans for all public improvements associated with the final plat shall have been approved or substantially approved by the City Engineer.

Fee: $750.00 + $25.00 per lot including remainder parcels; non-refundable.

Other Information: The applicant is encouraged to submit other information and documentation to support the request.

RECEIVED
OCT 25 2021

Final Plat Checklist as per Elko City Code 3-3-8

Identification Data	
✓	Subdivision Name
✓	Location and Section, Township and Range
✓	Name, address and phone number of subdivider
✓	Name, address and phone number of engineer/surveyor
✓	Scale, North Point and Date of Preparation
✓	Location maps
Survey Data (Required)	
✓	Boundaries of the Tract fully balanced and closed
✓	Any exception within the plat boundaries
✓	The subdivision is to be tied to a section corner
✓	Location and description of all physical encroachments
Descriptive Data	
✓	Street Layout, location, widths, easements
✓	All drainageways, designated as such
✓	All utility and public service easements
✓	Location and dimensions of all lots, parcels
✓	Residential Lots shall be numbered consecutively
✓	All sites to be dedicated to the public and proposed use
✓	Location of all adjoining subdivisions with name date, book and page
✓	Any private deed restrictions to be imposed upon the plat
Dedication and Acknowledgment	
✓	Statement of dedication for items to be dedicated
✓	Execution of dedication ackowledged by a notary public
Additional Information	
✓	Street CL, and Monuments identified
✓	Street CL and width shown on map
✓	Location of mounuments used to determine boudaries
✓	Each city boundary line crossing or adjoing the subdivision
✓	Section lines crossing the subdivision boundaries
City Engineer to Check	
✓	Closure report for each of the lots
✓	Civil Improvement plans
✓	Estimate of quantities required to complete the improvements
Required Certifications	
✓	All parties having record title in the land to be subdivided
✓	Offering for dedication
✓	Clerk of each approving governing body
✓	Easements
✓	Surveyor's Certificate
✓	City Engineer
✓	State Health division
✓	State Engineer
✓	Division of Water Resources
✓	City Council

By My Signature below:

☑ I consent to having the City of Elko Staff enter on my property for the sole purpose of inspection of said property as part of this application process.

☐ I object to having the City of Elko Staff enter onto my property as a part of their review of this application. (Your objection will not affect the recommendation made by the staff or the final determination made by the City Planning Commission or the City Council.)

☑ I acknowledge that submission of this application does not imply approval of this request by the City Planning Department, the City Planning Commission and the City Council, nor does it in and of itself guarantee issuance of any other required permits and/or licenses.

☑ I acknowledge that this application may be tabled until a later meeting if either I or my designated representative or agent is not present at the meeting for which this application is scheduled.

☑ I acknowledge that, if approved, I must provide an AutoCAD file containing the final subdivision layout on NAD 83 NV East Zone Coordinate System to the City Engineering Department when requesting final map signatures for recording.

☑ I have carefully read and completed all questions contained within this application to the best of my ability.

Applicant / Agent Sheldon F. Hetzel
(Please print or type)

Mailing Address 780 W. Silver St., Suite 104
Street Address or P.O. Box

Elko, NV 89801
City, State, Zip Code

Phone Number: 775-777-7773

Email address: Sheldon.SpringCreek@gmail.com

SIGNATURE: _____

FOR OFFICE USE ONLY

34 Lots x $25 = $850
$750
$1,600

File No.: 5-21 **Date Filed:** 10/25/21 **Fee Paid:** $1600 ck# 36779

```
================================================================================
Cedar Estates Unit 3
================================================================================
Area_Exterior
================================================================================
START
          .....................................28474255.08   615506.39
INV             N 89°31'37" E       631.42
          .....................................28474260.29   616137.79
INV             S 00°28'23" E       103.86
          .....................................28474156.44   616138.64
INV             S 32°31'59" W        16.30
          .....................................28474142.69   616129.88
RADIUS POINT (NON TANGENT CURVE RIGHT)
          .....................................28474079.98   616098.77

             12°18'05" DELTA
                  70.00 RADIUS
                  15.03 LENGTH
                  15.00 CHORD
                  7.54 TANGENT
TANGENT BRG
                S 63°37'03" E
                S 51°18'59" E
P.C. TO P.T.    S 57°28'01" E        15.00
          .....................................28474134.62   616142.52
NON-TANGENT LINE
INV             N 32°31'59" E        25.94
          .....................................28474156.49   616156.47
INV             N 76°51'10" E       125.82
          .....................................28474185.11   616278.99
INV             S 00°02'13" W       266.43
          .....................................28473918.69   616278.82
INV             N 89°57'47" W       110.00
          .....................................28473918.76   616168.82
INV             N 89°57'47" W        50.00
          .....................................28473918.79   616118.82
INV             S 00°02'13" W         8.34
          .....................................28473910.45   616118.81
INV             N 89°57'47" W       101.00
          .....................................28473910.51   616017.81
INV             N 00°02'13" E        87.78
          .....................................28473998.29   616017.87
INV             S 89°31'37" W       178.58
          .....................................28473996.82   615839.30
INV             S 00°28'23" E       130.89
          .....................................28473865.94   615840.38
INV             S 75°32'45" W       130.75
          .....................................28473833.30   615713.77
INV             N 00°02'13" E         5.06
```

```
          ....................................28473838.36   615713.77
INV             N 89°57'47" W        60.00
          ....................................28473838.39   615653.77
INV             S 00°02'13" W         8.64
          ....................................28473829.75   615653.76
RADIUS POINT (TANGENT CURVE LEFT)
          ....................................28473829.61   615883.76

             05°49'56" DELTA
                  230.00 RADIUS
                  23.41 LENGTH
                  23.40 CHORD
                  11.72 TANGENT
TANGENT BRG
                S 00°02'13" W
                S 05°47'43" E
P.C. TO P.T.    S 02°52'45" E         23.40
          ....................................28473806.38   615654.94
NON-TANGENT LINE
INV             S 73°31'07" W       137.55
          ....................................28473767.36   615523.04
INV             S 33°31'07" W        84.30
          ....................................28473697.08   615476.49
INV             N 56°40'28" W       170.96
          ....................................28473791.00   615333.65
INV             N 20°25'00" E       495.19
          ....................................28474255.08   615506.39

AREA     318316.7  SQUARE FEET     7.308 ACRES
TOTAL DISTANCE              2967.22
CLOSING VECTOR S 23°23'42" W 0.009
Closure precision = 1 in 325410
================================================================================
Area_ROW
================================================================================
START
          ....................................28473918.79   616118.82
INV             N 00°01'03" W       161.20
          ....................................28474079.99   616118.77
RADIUS POINT (TANGENT CURVE LEFT)
          ....................................28474079.98   616098.77

             89°57'59" DELTA
                  20.00 RADIUS
                  31.40 LENGTH
                  28.28 CHORD
                  19.99 TANGENT
TANGENT BRG
                N 00°01'04" W
                N 89°59'03" W
```

```
P.C. TO P.T.    N 45°00'03" W        28.28
          .....................................28474099.98   616098.78
NON-TANGENT LINE
INV             S 89°31'37" W       474.61
          .....................................28474096.06   615624.19
RADIUS POINT (TANGENT CURVE LEFT)
          .....................................28474076.06   615624.35

             69°06'37" DELTA
                  20.00 RADIUS
                  24.12 LENGTH
                  22.69 CHORD
                  13.77 TANGENT
TANGENT BRG
                S 89°31'37" W
                S 20°25'00" W
P.C. TO P.T.    S 54°58'19" W        22.69
          .....................................28474083.04   615605.61
INV             S 20°25'00" W        84.33
          .....................................28474004.01   615576.19
RADIUS POINT (TANGENT CURVE LEFT)
          .....................................28473977.84   615646.48

             20°22'47" DELTA
                  75.00 RADIUS
                  26.68 LENGTH
                  26.54 CHORD
                  13.48 TANGENT
TANGENT BRG
                S 20°25'00" W
                S 00°02'13" W
P.C. TO P.T.    S 10°13'36" W        26.54
          .....................................28473977.89   615571.48
INV             S 00°02'13" W        69.45
          .....................................28473908.45   615571.43
RADIUS POINT (TANGENT CURVE LEFT)
          .....................................28473908.43   615591.43

             90°00'00" DELTA
                  20.00 RADIUS
                  31.42 LENGTH
                  28.28 CHORD
                  20.00 TANGENT
TANGENT BRG
                S 00°02'13" W
                S 89°57'47" E
P.C. TO P.T.    S 44°57'47" E        28.28
          .....................................28473888.43   615591.42
INV             S 89°57'47" E        31.86
          .....................................28473888.41   615623.28
```

```
RADIUS POINT (TANGENT CURVE LEFT)
          .....................................28473908.41   615623.29

             23°37'44" DELTA
                  20.00 RADIUS
                  8.25 LENGTH
                  8.19 CHORD
                  4.18 TANGENT
TANGENT BRG
                S 89°57'47" E
                N 66°24'29" E
P.C. TO P.T.    N 78°13'21" E         8.19
          .....................................28473890.09   615631.30
RADIUS POINT (TANGENT CURVE RIGHT)
          .....................................28473839.68   615653.31

             114°58'14" DELTA
                  55.00 RADIUS
                  110.36 LENGTH
                  92.76 CHORD
                  86.28 TANGENT
TANGENT BRG
                N 66°24'29" E
                S 01°22'43" W
P.C. TO P.T.    S 56°06'24" E        92.76
          .....................................28473838.36   615708.30
NON-TANGENT LINE
INV             N 89°57'47" W        54.53
          .....................................28473838.39   615653.77
INV             S 00°02'13" W         6.12
          .....................................28473832.27   615653.76
RADIUS POINT (NON TANGENT CURVE LEFT)
          .....................................28473818.40   615639.35

             46°04'04" DELTA
                  20.00 RADIUS
                  16.08 LENGTH
                  15.65 CHORD
                  8.50 TANGENT
TANGENT BRG
                N 43°53'43" W
                N 89°57'47" W
P.C. TO P.T.    N 66°55'45" W        15.65
          .....................................28473838.40   615639.37
INV             N 89°57'47" W        47.98
          .....................................28473838.43   615591.39
RADIUS POINT (TANGENT CURVE RIGHT)
          .....................................28473908.43   615591.43

             90°00'00" DELTA
```

```
                  70.00 RADIUS
                  109.96 LENGTH
                  98.99 CHORD
                  70.00 TANGENT
TANGENT BRG
                N 89°57'47" W
                N 00°02'13" E
P.C. TO P.T.    N 44°57'47" W        98.99
          .....................................28473908.48   615521.43
INV             N 00°02'13" E        69.45
          .....................................28473977.92   615521.48
RADIUS POINT (TANGENT CURVE RIGHT)
          .....................................28473977.84   615646.48

             20°22'47" DELTA
                  125.00 RADIUS
                  44.46 LENGTH
                  44.23 CHORD
                  22.47 TANGENT
TANGENT BRG
                N 00°02'13" E
                N 20°25'00" E
P.C. TO P.T.    N 10°13'36" E        44.23
          .....................................28474021.45   615529.33
INV             N 20°25'00" E        84.33
          .....................................28474100.48   615558.75
RADIUS POINT (TANGENT CURVE RIGHT)
          .....................................28474076.06   615624.35

             69°06'37" DELTA
                  70.00 RADIUS
                  84.43 LENGTH
                  79.41 CHORD
                  48.21 TANGENT
TANGENT BRG
                N 20°25'00" E
                N 89°31'37" E
P.C. TO P.T.    N 54°58'19" E        79.41
          .....................................28474146.06   615623.77
INV             N 89°31'37" E       474.61
          .....................................28474149.98   616098.36
RADIUS POINT (NON TANGENT CURVE RIGHT)
          .....................................28474079.98   616098.77

             90°18'57" DELTA
                  70.00 RADIUS
                  110.34 LENGTH
                  99.27 CHORD
                  70.39 TANGENT
TANGENT BRG
```

```
               N 89°40'00" E
               S 00°01'03" E
P.C. TO P.T.   S 45°10'32" E        99.27
          .....................................28474080.00   616168.77
NON-TANGENT LINE
INV            S 00°01'03" E       161.25
          .....................................28473918.76   616168.82
INV            N 89°57'47" W        50.00
          .....................................28473918.79   616118.82
INV            N 89°58'17" W         0.00
          .....................................28473918.79   616118.82

AREA     56730.7  SQUARE FEET     1.302 ACRES
TOTAL DISTANCE             2367.21
CLOSING VECTOR N 79°07'27" E 0.005
Closure precision = 1 in 474494
================================================================================
Lot-1
================================================================================
START
          .....................................28473978.69   616278.86
INV            N 89°57'47" W       110.06
          .....................................28473978.76   616168.80
INV            S 00°01'03" E        60.00
          .....................................28473918.76   616168.82
INV            S 89°57'47" E       110.00
          .....................................28473918.69   616278.82
INV            N 00°02'13" E        60.00
          .....................................28473978.69   616278.86

AREA     6601.7  SQUARE FEET     0.152 ACRES
TOTAL DISTANCE             340.06
CLOSING VECTOR S 89°26'36" E 0.003
Closure precision = 1 in 113882
================================================================================
Lot-2
================================================================================
START
          .....................................28474038.69   616278.90
INV            N 89°57'47" W       110.11
          .....................................28474038.76   616168.78
INV            S 00°01'03" E        60.00
          .....................................28473978.76   616168.80
INV            S 89°57'47" E       110.06
          .....................................28473978.69   616278.86
INV            N 00°02'13" E        60.00
          .....................................28474038.69   616278.90

AREA     6605.1  SQUARE FEET     0.152 ACRES
TOTAL DISTANCE             340.17
```

```
CLOSING VECTOR S 89°48'56" W 0.007
Closure precision = 1 in 48498
================================================================================
Lot-3
================================================================================
START
         .....................................28474098.76   616166.21
INV            S 89°57'47" E       112.73
         .....................................28474098.69   616278.94
INV            S 00°02'13" W        60.00
         .....................................28474038.69   616278.90
INV            N 89°57'47" W       110.11
         .....................................28474038.76   616168.78
INV            N 00°01'03" W        41.25
         .....................................28474080.00   616168.77
RADIUS POINT (TANGENT CURVE LEFT)
         .....................................28474079.98   616098.77

            15°32'30" DELTA
                 70.00 RADIUS
                 18.99 LENGTH
                 18.93 CHORD
                 9.55 TANGENT
TANGENT BRG
               N 00°01'03" W
               N 15°33'33" W
P.C. TO P.T.   N 07°47'18" W        18.93
         .....................................28474098.76   616166.21

AREA     6624.4  SQUARE FEET     0.152 ACRES
TOTAL DISTANCE              343.08
CLOSING VECTOR S 42°52'20" W 0.005
Closure precision = 1 in 67945
================================================================================
Lot-4
================================================================================
START
         .....................................28474185.11   616278.99
INV            S 76°51'10" W       125.82
         .....................................28474156.49   616156.47
INV            S 32°31'59" W        25.94
         .....................................28474134.62   616142.52
RADIUS POINT (NON TANGENT CURVE RIGHT)
         .....................................28474079.98   616098.77

            35°45'24" DELTA
                 70.00 RADIUS
                 43.69 LENGTH
                 42.98 CHORD
                 22.58 TANGENT
```

```
TANGENT BRG
                S 51°18'57" E
                S 15°33'33" E
P.C. TO P.T.    S 33°26'15" E        42.98
          .....................................28474098.76   616166.21
NON-TANGENT LINE
INV             S 89°57'47" E       112.73
          .....................................28474098.69   616278.94
INV             N 00°02'13" E        86.43
          .....................................28474185.11   616278.99

AREA     8959.2  SQUARE FEET     0.206 ACRES
TOTAL DISTANCE              394.60
CLOSING VECTOR S 46°41'01" E 0.005
Closure precision = 1 in 83606
================================================================================
Lot-5
================================================================================
START
          .....................................28474260.29   616137.79
INV             S 89°31'37" W        59.85
          .....................................28474259.80   616077.94
INV             S 00°28'23" E       109.98
          .....................................28474149.82   616078.85
INV             N 89°31'37" E        19.17
          .....................................28474149.98   616098.02
RADIUS POINT (NON TANGENT CURVE RIGHT)
          .....................................28474079.98   616098.77

             26°59'43" DELTA
                  70.00 RADIUS
                  32.98 LENGTH
                  32.68 CHORD
                  16.80 TANGENT
TANGENT BRG
                N 89°23'14" E
                S 63°37'03" E
P.C. TO P.T.    S 77°06'54" E        32.68
          .....................................28474142.69   616129.88
NON-TANGENT LINE
INV             N 32°31'59" E        16.30
          .....................................28474156.44   616138.64
INV             N 00°28'23" W       103.86
          .....................................28474260.29   616137.79

AREA     6666.3  SQUARE FEET     0.153 ACRES
TOTAL DISTANCE              342.15
CLOSING VECTOR N 79°52'10" E 0.005
Closure precision = 1 in 66473
================================================================================
```

Lot-6

```
================================================================================
START
         .....................................28474259.80   616077.94
INV            S 89°31'37" W        60.00
         .....................................28474259.30   616017.94
INV            S 00°28'23" E       109.98
         .....................................28474149.32   616018.85
INV            N 89°31'37" E        60.00
         .....................................28474149.82   616078.85
INV            N 00°28'23" W       109.98
         .....................................28474259.80   616077.94

AREA     6599.0  SQUARE FEET     0.151 ACRES
TOTAL DISTANCE              339.97
CLOSING VECTOR N 90°00'00" E 0.000
Zero error of closure
================================================================================
```

Lot-7

```
================================================================================
START
         .....................................28474259.30   616017.94
INV            S 89°31'37" W        60.00
         .....................................28474258.81   615957.95
INV            S 00°28'23" E       109.98
         .....................................28474148.83   615958.85
INV            N 89°31'37" E        60.00
         .....................................28474149.32   616018.85
INV            N 00°28'23" W       109.98
         .....................................28474259.30   616017.94

AREA     6599.0  SQUARE FEET     0.151 ACRES
TOTAL DISTANCE              339.97
CLOSING VECTOR N 90°00'00" E 0.000
Zero error of closure
================================================================================
```

Lot-8

```
================================================================================
START
         .....................................28474258.81   615957.95
INV            S 89°31'37" W        60.00
         .....................................28474258.31   615897.95
INV            S 00°28'23" E       109.98
         .....................................28474148.33   615898.86
INV            N 89°31'37" E        60.00
         .....................................28474148.83   615958.85
INV            N 00°28'23" W       109.98
         .....................................28474258.81   615957.95

AREA     6599.0  SQUARE FEET     0.151 ACRES
```

```
TOTAL DISTANCE              339.97
CLOSING VECTOR N 90°00'00" E 0.000
Zero error of closure
================================================================================
Lot-9
================================================================================
START
          .....................................28474258.31   615897.95
INV             S 89°31'37" W        60.00
          .....................................28474257.82   615837.95
INV             S 00°28'23" E       109.98
          .....................................28474147.84   615838.86
INV             N 89°31'37" E        60.00
          .....................................28474148.33   615898.86
INV             N 00°28'23" W       109.98
          .....................................28474258.31   615897.95

AREA     6599.0  SQUARE FEET     0.151 ACRES
TOTAL DISTANCE              339.97
CLOSING VECTOR N 90°00'00" E 0.000
Zero error of closure
================================================================================
Lot-10
================================================================================
START
          .....................................28474257.82   615837.95
INV             S 89°31'37" W        60.00
          .....................................28474257.32   615777.95
INV             S 00°28'23" E       109.98
          .....................................28474147.34   615778.86
INV             N 89°31'37" E        60.00
          .....................................28474147.84   615838.86
INV             N 00°28'23" W       109.98
          .....................................28474257.82   615837.95

AREA     6599.0  SQUARE FEET     0.151 ACRES
TOTAL DISTANCE              339.97
CLOSING VECTOR N 90°00'00" E 0.000
Zero error of closure
================================================================================
Lot-11
================================================================================
START
          .....................................28474257.32   615777.95
INV             S 89°31'37" W        60.00
          .....................................28474256.83   615717.95
INV             S 00°28'23" E       109.98
          .....................................28474146.85   615718.86
INV             N 89°31'37" E        60.00
          .....................................28474147.34   615778.86
```

```
INV             N 00°28'23" W       109.98
          .....................................28474257.32   615777.95

AREA     6599.0  SQUARE FEET     0.151 ACRES
TOTAL DISTANCE              339.97
CLOSING VECTOR N 90°00'00" E 0.000
Zero error of closure
===============================================================================
Lot-12
===============================================================================
START
          .....................................28474256.83   615717.95
INV             S 89°31'37" W        60.00
          .....................................28474256.33   615657.96
INV             S 00°28'23" E       109.98
          .....................................28474146.35   615658.86
INV             N 89°31'37" E        60.00
          .....................................28474146.85   615718.86
INV             N 00°28'23" W       109.98
          .....................................28474256.83   615717.95

AREA     6599.0  SQUARE FEET     0.151 ACRES
TOTAL DISTANCE              339.97
CLOSING VECTOR N 90°00'00" E 0.000
Zero error of closure
===============================================================================
Lot-13
===============================================================================
START
          .....................................28474256.33   615657.96
INV             S 89°31'37" W        60.00
          .....................................28474255.84   615597.96
INV             S 00°28'23" E       107.95
          .....................................28474147.88   615598.85
INV             S 20°35'49" E         6.21
          .....................................28474142.07   615601.04
RADIUS POINT (NON TANGENT CURVE RIGHT)
          .....................................28474076.06   615624.35

             18°59'03" DELTA
                  70.00 RADIUS
                  23.19 LENGTH
                  23.09 CHORD
                  11.70 TANGENT
TANGENT BRG
                N 70°32'34" E
                N 89°31'37" E
P.C. TO P.T.    N 80°02'06" E        23.09
          .....................................28474146.06   615623.77
INV             N 89°31'37" E        35.09
```

```
         .....................................28474146.35   615658.86
INV            N 00°28'23" W       109.98
         .....................................28474256.33   615657.96

AREA     6629.4  SQUARE FEET     0.152 ACRES
TOTAL DISTANCE              342.44
CLOSING VECTOR S 03°05'49" W 0.007
Closure precision = 1 in 49804
================================================================================
Lot-14
================================================================================
START
         .....................................28474255.84   615597.96
INV            S 89°31'37" W        91.57
         .....................................28474255.08   615506.39
INV            S 20°25'00" W        62.29
         .....................................28474196.70   615484.66
INV            S 49°48'20" E       114.59
         .....................................28474122.75   615572.19
RADIUS POINT (NON TANGENT CURVE RIGHT)
         .....................................28474076.06   615624.35

            28°42'49" DELTA
                 70.00 RADIUS
                 35.08 LENGTH
                 34.71 CHORD
                 17.92 TANGENT
TANGENT BRG
               N 41°49'45" E
               N 70°32'34" E
P.C. TO P.T.   N 56°11'09" E        34.71
         .....................................28474142.07   615601.04
NON-TANGENT LINE
INV            N 20°35'49" W         6.21
         .....................................28474147.88   615598.85
INV            N 00°28'23" W       107.95
         .....................................28474255.84   615597.96

AREA    10946.1  SQUARE FEET     0.251 ACRES
TOTAL DISTANCE              417.70
CLOSING VECTOR N 14°16'35" E 0.012
Closure precision = 1 in 33746
================================================================================
Lot-15
================================================================================
START
         .....................................28474196.70   615484.66
INV            S 20°25'00" W        98.38
         .....................................28474104.50   615450.34
INV            S 69°35'00" E       103.00
```

```
          .....................................28474068.57   615546.87
INV             N 20°25'00" E        34.05
          .....................................28474100.48   615558.75
RADIUS POINT (TANGENT CURVE RIGHT)
          .....................................28474076.06   615624.35

             21°24'45" DELTA
                  70.00 RADIUS
                  26.16 LENGTH
                  26.01 CHORD
                  13.23 TANGENT
TANGENT BRG
                N 20°25'00" E
                N 41°49'45" E
P.C. TO P.T.    N 31°07'22" E        26.01
          .....................................28474122.75   615572.19
NON-TANGENT LINE
INV             N 49°48'20" W       114.59
          .....................................28474196.70   615484.66

AREA     8270.5  SQUARE FEET     0.190 ACRES
TOTAL DISTANCE              376.18
CLOSING VECTOR S 64°07'16" W 0.002
Closure precision = 1 in 193884
================================================================================
Lot-16
================================================================================
START
          .....................................28474068.57   615546.87
INV             N 69°35'00" W       103.00
          .....................................28474104.50   615450.34
INV             S 20°25'00" W        60.00
          .....................................28474048.27   615429.41
INV             S 69°35'00" E       103.38
          .....................................28474012.21   615526.30
RADIUS POINT (NON TANGENT CURVE RIGHT)
          .....................................28473977.84   615646.48

             04°27'33" DELTA
                  125.00 RADIUS
                  9.73 LENGTH
                  9.73 CHORD
                  4.87 TANGENT
TANGENT BRG
                N 15°57'27" E
                N 20°25'00" E
P.C. TO P.T.    N 18°11'13" E         9.73
          .....................................28474021.45   615529.33
INV             N 20°25'00" E        50.28
          .....................................28474068.57   615546.87
```

```
AREA     6181.2  SQUARE FEET     0.142 ACRES
TOTAL DISTANCE              326.39
CLOSING VECTOR S 49°08'22" W 0.003
Closure precision = 1 in 108703
================================================================================
Lot-17
================================================================================
START
          .....................................28474012.21   615526.30
INV             N 69°35'00" W       103.38
          .....................................28474048.27   615429.41
INV             S 20°25'00" W        72.54
          .....................................28473980.29   615404.11
INV             S 75°58'53" E       120.96
          .....................................28473950.99   615521.46
INV             N 00°02'13" E        26.93
          .....................................28473977.92   615521.48
RADIUS POINT (TANGENT CURVE RIGHT)
          .....................................28473977.84   615646.48

             15°55'14" DELTA
                  125.00 RADIUS
                  34.73 LENGTH
                  34.62 CHORD
                  17.48 TANGENT
TANGENT BRG
                N 00°02'13" E
                N 15°57'27" E
P.C. TO P.T.    N 07°59'50" E        34.62
          .....................................28474012.21   615526.30

AREA     7320.1  SQUARE FEET     0.168 ACRES
TOTAL DISTANCE              358.54
CLOSING VECTOR N 03°18'27" W 0.007
Closure precision = 1 in 49708
================================================================================
Lot-18
================================================================================
START
          .....................................28473950.99   615521.46
INV             N 75°58'53" W       120.96
          .....................................28473980.29   615404.11
INV             S 20°25'00" W        96.02
          .....................................28473890.30   615370.61
INV             S 89°57'47" E       153.24
          .....................................28473890.20   615523.85
RADIUS POINT (NON TANGENT CURVE RIGHT)
          .....................................28473908.43   615591.43
```

```
            15°07'55" DELTA
                 70.00 RADIUS
                 18.49 LENGTH
                 18.43 CHORD
                 9.30 TANGENT
TANGENT BRG
               N 15°05'42" W
               N 00°02'13" E
P.C. TO P.T.   N 07°31'45" W        18.43
         .....................................28473908.48   615521.43
INV            N 00°02'13" E        42.51
         .....................................28473950.99   615521.46

AREA     10369.1  SQUARE FEET     0.238 ACRES
TOTAL DISTANCE             431.21
CLOSING VECTOR N 12°17'39" E 0.005
Closure precision = 1 in 87802
================================================================================
Lot-19
================================================================================
START
         .....................................28473845.41   615560.97
RADIUS POINT (NON TANGENT CURVE RIGHT)
         .....................................28473908.43   615591.43

            49°06'31" DELTA
                 70.00 RADIUS
                 60.00 LENGTH
                 58.18 CHORD
                 31.98 TANGENT
TANGENT BRG
               N 64°12'13" W
               N 15°05'42" W
P.C. TO P.T.   N 39°38'58" W        58.18
         .....................................28473890.20   615523.85
NON-TANGENT LINE
INV            N 89°57'47" W       153.24
         .....................................28473890.30   615370.61
INV            S 20°25'00" W       105.96
         .....................................28473791.00   615333.65
INV            N 76°32'23" E       233.75
         .....................................28473845.41   615560.97

AREA     13463.9  SQUARE FEET     0.309 ACRES
TOTAL DISTANCE             552.94
CLOSING VECTOR S 42°19'53" W 0.003
Closure precision = 1 in 219589
================================================================================
Lot-20
================================================================================
```

```
START
          ....................................28473806.38   615654.94
RADIUS POINT (NON TANGENT CURVE RIGHT)
          ....................................28473829.61   615883.76

             05°49'56" DELTA
                  230.00 RADIUS
                  23.41 LENGTH
                  23.40 CHORD
                  11.72 TANGENT
TANGENT BRG
                N 05°47'43" W
                N 00°02'13" E
P.C. TO P.T.    N 02°52'45" W        23.40
          ....................................28473829.75   615653.76
INV             N 00°02'13" E         2.52
          ....................................28473832.27   615653.76
RADIUS POINT (NON TANGENT CURVE LEFT)
          ....................................28473818.40   615639.35

             46°04'04" DELTA
                  20.00 RADIUS
                  16.08 LENGTH
                  15.65 CHORD
                  8.50 TANGENT
TANGENT BRG
                N 43°53'43" W
                N 89°57'47" W
P.C. TO P.T.    N 66°55'45" W        15.65
          ....................................28473838.40   615639.37
INV             N 89°57'47" W        47.98
          ....................................28473838.43   615591.39
RADIUS POINT (TANGENT CURVE RIGHT)
          ....................................28473908.43   615591.43

             25°45'34" DELTA
                  70.00 RADIUS
                  31.47 LENGTH
                  31.21 CHORD
                  16.01 TANGENT
TANGENT BRG
                N 89°57'47" W
                N 64°12'13" W
P.C. TO P.T.    N 77°05'00" W        31.21
          ....................................28473845.41   615560.97
NON-TANGENT LINE
INV             S 76°32'23" W       233.75
          ....................................28473791.00   615333.65
INV             S 56°40'28" E       170.96
          ....................................28473697.08   615476.49
```

```
INV             N 33°31'07" E        84.30
          ....................................28473767.36   615523.04
INV             N 73°31'07" E       137.55
          ....................................28473806.38   615654.94

AREA     20643.1  SQUARE FEET     0.474 ACRES
TOTAL DISTANCE              748.00
CLOSING VECTOR S 81°49'06" E 0.004
Closure precision = 1 in 168959
================================================================================
Lot-21
================================================================================
START
          ....................................28473996.82   615839.30
INV             S 89°31'37" W        78.81
          ....................................28473996.17   615760.49
INV             S 00°02'13" W       126.06
          ....................................28473870.11   615760.41
INV             S 75°32'45" W        56.37
          ....................................28473856.04   615705.82
RADIUS POINT (NON TANGENT CURVE RIGHT)
          ....................................28473839.68   615653.31

             18°40'41" DELTA
                  55.00 RADIUS
                  17.93 LENGTH
                  17.85 CHORD
                  9.05 TANGENT
TANGENT BRG
                S 17°17'57" E
                S 01°22'43" W
P.C. TO P.T.    S 07°57'37" E        17.85
          ....................................28473838.36   615708.30
NON-TANGENT LINE
INV             S 89°57'47" E         5.47
          ....................................28473838.36   615713.77
INV             S 00°02'13" W         5.06
          ....................................28473833.30   615713.77
INV             N 75°32'45" E       130.75
          ....................................28473865.94   615840.38
INV             N 00°28'23" W       130.89
          ....................................28473996.82   615839.30

AREA     12463.1  SQUARE FEET     0.286 ACRES
TOTAL DISTANCE              551.34
CLOSING VECTOR N 78°28'53" E 0.005
Closure precision = 1 in 111484
================================================================================
Lot-22
================================================================================
```

```
START
         ....................................28473996.17   615760.49
INV            S 89°31'37" W       62.00
         ....................................28473995.66   615698.49
INV            S 00°02'13" W       91.31
         ....................................28473904.35   615698.43
INV            S 34°54'15" W       23.85
         ....................................28473884.79   615684.78
RADIUS POINT (NON TANGENT CURVE RIGHT)
         ....................................28473839.68   615653.31

            37°47'48" DELTA
                 55.00 RADIUS
                 36.28 LENGTH
                 35.63 CHORD
                 18.83 TANGENT
TANGENT BRG
               S 55°05'45" E
               S 17°17'57" E
P.C. TO P.T.   S 36°11'51" E       35.63
         ....................................28473856.04   615705.82
NON-TANGENT LINE
INV            N 75°32'45" E       56.37
         ....................................28473870.11   615760.41
INV            N 00°02'13" E      126.06
         ....................................28473996.17   615760.49

AREA     8440.2  SQUARE FEET     0.194 ACRES
TOTAL DISTANCE             395.87
CLOSING VECTOR N 51°11'47" W 0.007
Closure precision = 1 in 59336
================================================================================
Lot-23
================================================================================
START
         ....................................28473995.66   615698.49
INV            S 89°31'37" W       62.00
         ....................................28473995.14   615636.49
INV            S 00°02'13" W      103.12
         ....................................28473892.03   615636.42
RADIUS POINT (NON TANGENT CURVE RIGHT)
         ....................................28473839.68   615653.31

            52°47'09" DELTA
                 55.00 RADIUS
                 50.67 LENGTH
                 48.90 CHORD
                 27.29 TANGENT
TANGENT BRG
               N 72°07'06" E
```

```
               S 55°05'45" E
P.C. TO P.T.   S 81°29'19" E        48.90
         .....................................28473884.79   615684.78
NON-TANGENT LINE
INV            N 34°54'15" E        23.85
         .....................................28473904.35   615698.43
INV            N 00°02'13" E        91.31
         .....................................28473995.66   615698.49

AREA     6360.6  SQUARE FEET     0.146 ACRES
TOTAL DISTANCE              330.95
CLOSING VECTOR S 85°18'22" W 0.003
Closure precision = 1 in 108584
================================================================================
Lot-24
================================================================================
START
         .....................................28473995.14   615636.49
INV            S 89°31'37" W        63.11
         .....................................28473994.62   615573.38
RADIUS POINT (NON TANGENT CURVE LEFT)
         .....................................28473977.84   615646.48

            12°53'26" DELTA
                 75.00 RADIUS
                 16.87 LENGTH
                 16.84 CHORD
                 8.47 TANGENT
TANGENT BRG
               S 12°55'38" W
               S 00°02'13" W
P.C. TO P.T.   S 06°28'56" W        16.84
         .....................................28473977.89   615571.48
INV            S 00°02'13" W        69.45
         .....................................28473908.45   615571.43
RADIUS POINT (TANGENT CURVE LEFT)
         .....................................28473908.43   615591.43

            90°00'00" DELTA
                 20.00 RADIUS
                 31.42 LENGTH
                 28.28 CHORD
                 20.00 TANGENT
TANGENT BRG
               S 00°02'13" W
               S 89°57'47" E
P.C. TO P.T.   S 44°57'47" E        28.28
         .....................................28473888.43   615591.42
INV            S 89°57'47" E        31.86
         .....................................28473888.41   615623.28
```

```
RADIUS POINT (TANGENT CURVE LEFT)
          .....................................28473908.41   615623.29

             23°37'44" DELTA
                  20.00 RADIUS
                  8.25 LENGTH
                  8.19 CHORD
                  4.18 TANGENT
TANGENT BRG
                S 89°57'47" E
                N 66°24'29" E
P.C. TO P.T.    N 78°13'21" E         8.19
          .....................................28473890.09   615631.30
RADIUS POINT (TANGENT CURVE RIGHT)
          .....................................28473839.68   615653.31

             05°42'37" DELTA
                  55.00 RADIUS
                  5.48 LENGTH
                  5.48 CHORD
                  2.74 TANGENT
TANGENT BRG
                N 66°24'29" E
                N 72°07'06" E
P.C. TO P.T.    N 69°15'48" E         5.48
          .....................................28473892.03   615636.42
NON-TANGENT LINE
INV             N 00°02'13" E       103.12
          .....................................28473995.14   615636.49

AREA     6804.7  SQUARE FEET     0.156 ACRES
TOTAL DISTANCE              329.56
CLOSING VECTOR N 19°24'15" E 0.002
Closure precision = 1 in 170951
================================================================================
Lot-25
================================================================================
START
          .....................................28474096.33   615657.05
INV             S 89°31'37" W        32.86
          .....................................28474096.06   615624.19
RADIUS POINT (TANGENT CURVE LEFT)
          .....................................28474076.06   615624.35

             69°06'37" DELTA
                  20.00 RADIUS
                  24.12 LENGTH
                  22.69 CHORD
                  13.77 TANGENT
TANGENT BRG
```

```
               S 89°31'37" W
               S 20°25'00" W
P.C. TO P.T.   S 54°58'19" W        22.69
         .....................................28474083.04   615605.61
INV            S 20°25'00" W        84.33
         .....................................28474004.01   615576.19
RADIUS POINT (TANGENT CURVE LEFT)
         .....................................28473977.84   615646.48

            07°29'22" DELTA
                 75.00 RADIUS
                 9.80 LENGTH
                 9.80 CHORD
                 4.91 TANGENT
TANGENT BRG
               S 20°25'00" W
               S 12°55'38" W
P.C. TO P.T.   S 16°40'19" W         9.80
         .....................................28473994.62   615573.38
NON-TANGENT LINE
INV            N 89°31'37" E        84.51
         .....................................28473995.32   615657.88
INV            N 00°28'23" W       101.02
         .....................................28474096.33   615657.05

AREA     6622.1  SQUARE FEET     0.152 ACRES
TOTAL DISTANCE             336.65
CLOSING VECTOR N 76°49'21" W 0.005
Closure precision = 1 in 74550
================================================================================
Lot-26
================================================================================
START
         .....................................28474096.83   615717.05
INV            S 89°31'37" W        60.00
         .....................................28474096.33   615657.05
INV            S 00°28'23" E       101.02
         .....................................28473995.32   615657.88
INV            N 89°31'37" E        60.00
         .....................................28473995.82   615717.88
INV            N 00°28'23" W       101.02
         .....................................28474096.83   615717.05

AREA     6061.0  SQUARE FEET     0.139 ACRES
TOTAL DISTANCE             322.03
CLOSING VECTOR N 90°00'00" E 0.000
Zero error of closure
================================================================================
Lot-27
================================================================================
```

```
START
         ....................................28474097.33   615777.05
INV           S 89°31'37" W        60.00
         ....................................28474096.83   615717.05
INV           S 00°28'23" E       101.02
         ....................................28473995.82   615717.88
INV           N 89°31'37" E        60.00
         ....................................28473996.31   615777.88
INV           N 00°28'23" W       101.02
         ....................................28474097.33   615777.05

AREA     6061.0  SQUARE FEET     0.139 ACRES
TOTAL DISTANCE              322.03
CLOSING VECTOR N 90°00'00" E 0.000
Zero error of closure
===============================================================================
Lot-28
===============================================================================
START
         ....................................28474097.82   615837.04
INV           S 89°31'37" W        60.00
         ....................................28474097.33   615777.05
INV           S 00°28'23" E       101.02
         ....................................28473996.31   615777.88
INV           N 89°31'37" E        60.00
         ....................................28473996.81   615837.88
INV           N 00°28'23" W       101.02
         ....................................28474097.82   615837.04

AREA     6061.0  SQUARE FEET     0.139 ACRES
TOTAL DISTANCE              322.03
CLOSING VECTOR N 90°00'00" E 0.000
Zero error of closure
===============================================================================
Lot-29
===============================================================================
START
         ....................................28474098.32   615897.04
INV           S 89°31'37" W        60.00
         ....................................28474097.82   615837.04
INV           S 00°28'23" E       101.02
         ....................................28473996.81   615837.88
INV           N 89°31'37" E        60.00
         ....................................28473997.30   615897.88
INV           N 00°28'23" W       101.02
         ....................................28474098.32   615897.04

AREA     6061.0  SQUARE FEET     0.139 ACRES
TOTAL DISTANCE              322.03
CLOSING VECTOR N 90°00'00" E 0.000
```

```
Zero error of closure
================================================================================
Lot-30
================================================================================
START
          .....................................28474098.81   615957.04
INV             S 89°31'37" W        60.00
          .....................................28474098.32   615897.04
INV             S 00°28'23" E       101.02
          .....................................28473997.30   615897.88
INV             N 89°31'37" E        60.00
          .....................................28473997.80   615957.87
INV             N 00°28'23" W       101.02
          .....................................28474098.81   615957.04

AREA     6061.0  SQUARE FEET     0.139 ACRES
TOTAL DISTANCE              322.03
CLOSING VECTOR N 90°00'00" E 0.000
Zero error of closure
================================================================================
Lot-31
================================================================================
START
          .....................................28474099.31   616017.94
INV             S 89°31'37" W        60.90
          .....................................28474098.81   615957.04
INV             S 00°28'23" E       101.02
          .....................................28473997.80   615957.87
INV             N 89°31'37" E        60.00
          .....................................28473998.29   616017.87
INV             N 00°02'13" E        32.22
          .....................................28474030.51   616017.89
INV             N 00°02'13" E        68.80
          .....................................28474099.31   616017.94

AREA     6106.4  SQUARE FEET     0.140 ACRES
TOTAL DISTANCE              322.94
CLOSING VECTOR N 11°02'04" E 0.004
Closure precision = 1 in 79073
================================================================================
Lot-32
================================================================================
START
          .....................................28474079.99   616118.77
RADIUS POINT (NON TANGENT CURVE LEFT)
          .....................................28474079.98   616098.77

             90°56'41" DELTA
                  20.00 RADIUS
                  31.75 LENGTH
```

```
                  28.52 CHORD
                  20.33 TANGENT
TANGENT BRG
                N 00°01'03" W
                S 89°02'17" W
P.C. TO P.T.    N 45°29'23" W        28.52
          ....................................28474099.98   616098.44
NON-TANGENT LINE
INV             S 89°31'37" W        80.50
          ....................................28474099.31   616017.94
INV             S 00°02'13" W        68.80
          ....................................28474030.51   616017.89
INV             S 89°57'47" E       100.89
          ....................................28474030.45   616118.79
INV             N 00°01'03" W        49.54
          ....................................28474079.99   616118.77

AREA     6897.0  SQUARE FEET     0.158 ACRES
TOTAL DISTANCE              331.48
CLOSING VECTOR S 52°28'12" E 0.006
Closure precision = 1 in 51671
================================================================================
Lot-33
================================================================================
START
          ....................................28474030.45   616118.79
INV             N 89°57'47" W       100.89
          ....................................28474030.51   616017.89
INV             S 00°02'13" W        32.22
          ....................................28473998.29   616017.87
INV             S 00°02'13" W        27.78
          ....................................28473970.51   616017.85
INV             S 89°57'47" E       100.95
          ....................................28473970.45   616118.80
INV             N 00°01'03" W        60.00
          ....................................28474030.45   616118.79

AREA     6055.4  SQUARE FEET     0.139 ACRES
TOTAL DISTANCE              321.85
CLOSING VECTOR N 89°26'36" W 0.003
Closure precision = 1 in 107783
================================================================================
Lot-34
================================================================================
START
          ....................................28473970.45   616118.80
INV             N 89°57'47" W       100.95
          ....................................28473970.51   616017.85
INV             S 00°02'13" W        60.00
          ....................................28473910.51   616017.81
```

```
INV             S 89°57'47" E       101.00
          .....................................28473910.45   616118.81
INV             N 00°02'13" E         8.34
          .....................................28473918.79   616118.82
INV             N 00°01'03" W        51.66
          .....................................28473970.45   616118.80

AREA     6058.7  SQUARE FEET     0.139 ACRES
TOTAL DISTANCE              321.95
CLOSING VECTOR N 88°29'47" W 0.001
Closure precision = 1 in 353336
```

10-19-2021

OWNER / DEVELOPER

BAILEY AND ASSOCIATES LLC.
780 WEST SILVER STREET, #104
ELKO, NEVADA 89801

ATTN: SHELDON HETZEL
775-777-7773
INFO@NEWHOMESELKO.COM

CIVIL IMPROVEMENTS PLANS FOR CEDAR ESTATES SUBDIVISION UNIT NO. 3 ELKO, NEVADA

ELKO **ELKO COUNTY** **NEVADA**

ENGINEER

SUMMIT ENGINEERING CORPORATION
1150 LAMOILLE HIGHWAY
ELKO, NEVADA 89801
(775) 738 - 8058
WWW.SUMMITNV.COM
NITIN@SUMMITNV.COM

APPROVED
CITY OF ELKO DEVELOPMENT DEPT.
Michelle Rambo
11/08/2021

APPROVED
City of Elko Fire Department
Jamie Ward
11/15/2021

City of Elko Planning Department
APPROVED
11/08/2021

APPROVED
ENGINEERING DEPARTMENT
10/26/2021
Robert Thibault

UTILITIES APPROVED
10/27/2021 8:01:00 AM

PROJECT DATA

TOTAL SUBDIVIDED AREA = 7.31 ACRES
TOTAL RIGHT-OF-WAY AREA = 1.08 ACRES (57,848 SF)
OFFERED FOR DEDICATION
NET AREA ~ (TOTAL AREA - RIGHT-OF-WAY AREA) = 6.23 ACRES

TOTAL UNITS = 34 LOTS
ESTIMATED WATER USAGE = 38.10 ACRE FEET PER YEAR
ESTIMATED SEWER CONTRIBUTIONS = 11,900 GALLONS PER DAY
THIS PROPOSED SUBDIVISION IS LOCATED IN SECTION 13, T 34 N, R 55 E. MDB&M.

THE REQUIRED FIRE FLOW FOR THIS DEVELOPMENT WILL BE A MINIMUM OF 1,500 GPM FOR 2 HOURS, FOR RESIDENTIAL TYPE V-B CONSTRUCTION.

BASIS OF BEARINGS

THE BOUNDARY LINE ADJUSTMENT RECORD OF SURVEY FOR CEDAR ESTATES, LLC. AND MARIA TARABINI, RECORDED IN THE OFFICE OF THE ELKO COUNTY RECORDER AS FILE NO. 548514, ON FEBRUARY 9, 2006.

BASIS OF ELEVATION

THE NGS BENCHMARK, B-52, SET IN THE WALL OF THE ELKO MAIN POST OFFICE, AT THE NORTHERLY CORNER OF THE BUILDING, TAKEN AS THE NAVD '88 ELEVATION OF 5066.47'.

ABBREVIATIONS

A.C.	.....	ASPHALTIC CONCRETE	M.D.D	.....	MAXIMUM DRY DENSITY
AGG.	.....	AGGREGATE	LT.	.....	LEFT
B.C.	.....	BEGIN CURVE	L.P.	.....	LOW POINT
B.F.	.....	BOTTOM OF FOOTING	M.H.	.....	MANHOLE
B.V.C.	.....	BEGIN VERTICAL CURVE	P.	.....	PAD ELEVATION
B.W.	.....	BACK OF SIDEWALK	PCC	.....	POINT OF COMPOUND CURV.
C.B.	.....	CATCH BASIN	PI.	.....	POINT OF INTERSECTION
℄	.....	CENTERLINE	P.R.C.	.....	POINT OF REVERSE CURVATURE
CONC.	.....	CONCRETE	P.V.C.	.....	POLYVINYL CHLORIDE PIPE
CONST.	.....	CONSTRUCT	P.O.	.....	PUSH ON
CLR	.....	CLEARANCE	P.U.E.	.....	PUBLIC UTILITY EASEMENT
C.P.	.....	CONCRETE PIPE	ℙ	.....	PROPERTY LINE
D.I	.....	DROP INLET	Q10	.....	10-YEAR STORM FLOW
DF	.....	DEEPENED FOOTING	Q100	.....	100-YEAR STORM FLOW
DET.	.....	DETAIL	(R)	.....	RADIAL
E.	.....	ELECTRICAL	R	.....	RADIUS
ELEV.	.....	ELEVATION	REF.	.....	REFERENCE
E.C.	.....	END OF CURVE	R.C.P.	.....	REINFORCED CONCRETE PIPE
E.V.C.	.....	END OF VERTICAL CURVE	R.P.	.....	RADIUS POINT
EXIST.	.....	EXISTING	RT.	.....	RIGHT
(e)	.....	EXISTING	R/W	.....	RIGHT OF WAY
E.G.	.....	EXISTING GRADE	S	.....	SLOPE
F.F.	.....	FINISHED FLOOR	S.G.	.....	SUBGRADE
F.F.C.	.....	FRONT FACE OF CURB	S.S.	.....	SANITARY SEWER
F.G.	.....	FINISHED GRADE	S.W.	.....	SIDEWALK
F.H.	.....	FIRE HYDRANT	STD.	.....	STANDARD
℉	.....	FLOW LINE	SHT.	.....	SHEET
FLG.	.....	FLANGE	STA.	.....	STATION
G.	.....	GAS	S.D.	.....	STORM DRAIN
G.B.	.....	GRADE BREAK	TW	.....	TOP OF WALL
GTV.	.....	GATE VALVE	TELE.	.....	TELEPHONE
H.C.	.....	HANDICAPPED	T.C.	.....	TOP OF CURB
HORIZ.	.....	HORIZONTAL	T.B.	.....	THRUST BLOCK
H.P.	.....	HIGH POINT	TOE	.....	TOE OF SLOPE
INT.	.....	INTERSECTION	TOP	.....	TOP OF SLOPE
I.E.	.....	INVERT ELEVATION	TYP.	.....	TYPICAL
L	.....	LENGTH	V.C.	.....	VERTICAL CURVE
L.F.	.....	LINEAL FEET	V.P.I.	.....	VERT. POINT OF INTERSECTION
L.P.	.....	LOW POINT	W	.....	WATER
			△	.....	CURVE DELTA

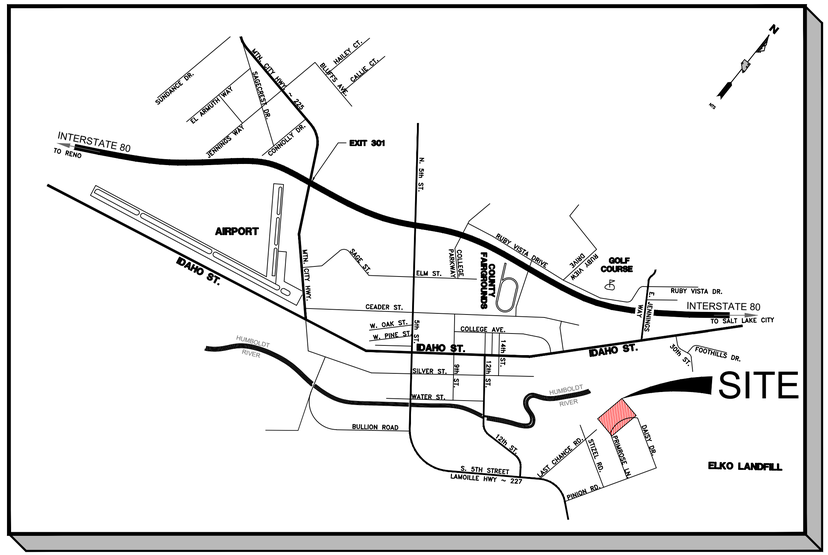

VICINITY MAP

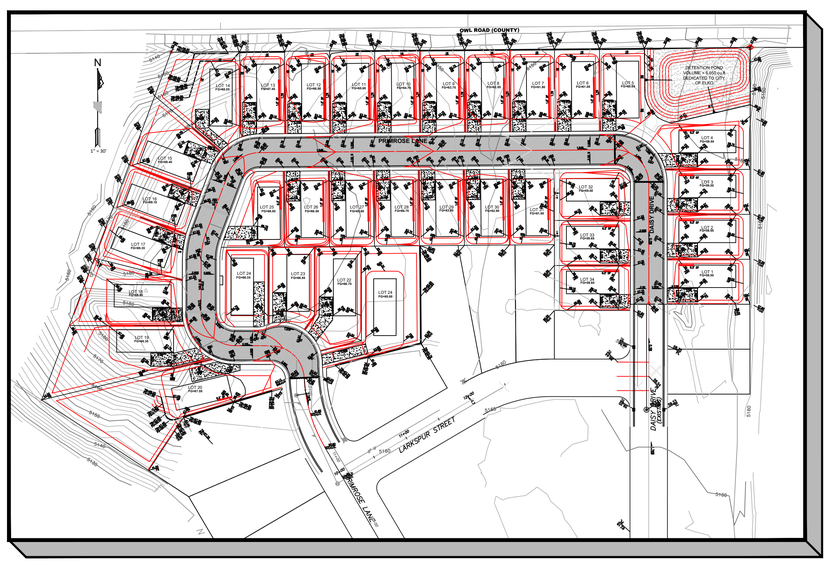

SITE PLAN

SHEET INDEX

T-1	.....	TITLE SHEET
N-1	.....	GENERAL NOTES SHEET
1-2	.....	FINAL PLAT - SHEET 1
2-3	.....	FINAL PLAT - SHEET 2
G-1	.....	GRADING PLAN
U-1	.....	UTILITY PLAN
P-1	.....	PLAN & PROFILE - PRIMROSE LANE
P-2	.....	PLAN & PROFILE - PRIMROSE LANE
P-3	.....	PLAN & PROFILE - DAISY DRIVE
S-1	.....	SIGNAGE & STRIPING PLAN
E-1	.....	EROSION CONTROL PLAN
D-1	.....	DETAIL SHEET 1
D-2	.....	DETAIL SHEET 2
D-3	.....	DETAIL SHEET 3
D-4	.....	DETAIL SHEET 4

LAND USE CLASSIFICATION

RMH (RESIDENTIAL MANUFACTURED HOUSING)

EASEMENTS: ALL LOTS TO CONTAIN A 5.00' UTILITY AND DRAINAGE EASEMENT ALONG THE SIDES AND REAR LOT LINES AND A 7.50' DRAINAGE AND UTILITY EASEMENT ALONG THE CITY RIGHT-OF-WAY

FLOOD PLAIN: BASED ON THE FLOOD INSURANCE RATE MAP FOR THE CITY OF ELKO, 32007C5628E, DATED SEPTEMBER 4, 2013 THE ENTIRE SITE LIES OUTSIDE THE 100 YEAR FLOOD PLAIN

SITE INFO: BASED UPON THE CITY OF ELKO AND BLM HISTORIC DATA THE SUBJECT PROPERTY HAS BEEN EXCLUSIVELY USED AS OPEN RANGE.

LOCATION: THIS SITE IS LOCATED WITHIN SECTION 13, TOWNSHIP 34 NORTH RANGE 55 EAST IN ELKO, NEVADA

ADJACENT ZONING: NORTH - EXISTING RESIDENTIAL - COUNTY LOTS
SOUTH - EXISTING RMH PHASE 1 & 2 OF CEDAR ESTATES
EAST - HUMBOLDT READY MIX - LIGHT INDUSTRIAL
WEST - EXISTING UNDEVELOPED - LIGHT INDUSTRIAL PROPERTY

UTILITIES

ELECTRIC ~ NV ENERGY
TELEVISION ~ ZITO MEDIA
TELEPHONE ~ FRONTIER COMMUNICATION
GAS ~ SOUTHWEST GAS CORPORATION

WATER ~ CITY OF ELKO
SANITARY SEWER ~ CITY OF ELKO
GARBAGE UTILITIES ~ ELKO SANITATION (CITY LANDFILL)

SPECIFICATIONS

ALL CONSTRUCTION SHALL CONFORM TO THE STANDARD SPECIFICATIONS FOR PUBLIC WORKS CONSTRUCTION (CURRENT EDITION AND ANY APPURTENANT SUPPLEMENTS) SPONSORED AND DISTRIBUTED BY RENO, SPARKS, WASHOE COUNTY, AND THE RECOMMENDATIONS ESTABLISHED BY THE SOILS INVESTIGATION FOR THIS SITE.

ENGINEER'S STATEMENT

THESE PLANS (SHEETS T-1 OF 13 THROUGH D-4 OF 13) HAVE BEEN PREPARED IN ACCORDANCE WITH ACCEPTED ENGINEERING PROCEDURES AND GUIDELINES, AND ARE IN SUBSTANTIAL COMPLIANCE WITH APPLICABLE STATUTES, CITY ORDINANCES, AND CODES. IN THE EVENT OF CONFLICT BETWEEN ANY PORTION OF THESE PLANS AND CITY CODES, THE CITY CODES SHALL PREVAIL.

NITIN I. BHAKTA
Exp. 12-31-22
CIVIL
No. 15498
STATE OF NEVADA
10-25-21

SUMMIT ENGINEERING CORPORATION
1150 LAMOILLE HIGHWAY, ELKO, NV. 89801
PHONE:(775) 738-8058 FAX:(775) 747-8559

May 19, 2021

REV.	DATE	DESCRIPTION	BY	APP'D

CIVIL IMPROVEMENTS PLANS FOR
CEDAR ESTATES SUBDIVISION ~ UNIT NO. 3
TITLE SHEET
ELKO COUNTY NEVADA
ELKO

DESIGNED BY: CIVIL
CHECKED BY: NIB
SCALE
HORIZ: 1"=40'
VERT: NONE
JOB NO: 81966

SHEET T-1 OF 13

L:\Nitin\Dwgs\81966_Cedar Estates_Bailey\CIVIL\81966_CEDAR CREEK ESTATES NITIN.dwg

LEGEND

- PROPOSED STORM DRAIN / SANITARY SEWER W/SIZE & DIRECTION INDICATOR
- EXISTING STORM DRAIN/SANITARY SEWER W/SIZE & DIRECTION INDICATOR
- SEWER LATERAL
- AC PAVEMENT AREA
- CONCRETE AREA (4000 PSI)
- TYPE 2 BASE GRAVEL AREA (95% MDD)
- EXISTING AC PAVEMENT
- GRADE BREAK
- PROPOSED ELEV. @ FRONT FACE TOP OF CURB
- PROPOSED ELEV. @ GRADE BREAK
- PROPOSED ELEV. @ HIGH PT.
- PROPOSED ELEV. @ FLOW LINE
- PROPOSED ELEV. @ FINISHED GRADE
- EXISTING CONTOUR LINE
- PROPOSED CONTOUR LINE
- ACCESSIBLE RAMP
- DRAINAGE SWALE FLOW LINE
- CUT OR FILL SLOPE
- EXISTING STORM DRAIN
- EXISTING GAS
- PROPOSED FENCE
- EXISTING TELEPHONE
- EXISTING ELECTRIC OVERHEAD LINE
- EXISTING WATERLINE
- EXISTING SANITARY SEWER
- BACKFLOW PREVENTOR
- CHECK VALVE
- CHECK VALVE-DOUBLE
- FLUSH VALVE
- METER-DUAL
- METER-SINGLE
- REDUCER
- SERVICE-DUAL
- SERVICE-SINGLE
- TEE
- VALVE
- EX ELECTRIC VAULT/BOX
- EXISTING TEELPHONE PEDESTAL
- EXISTING LIGHT
- EXISTING SIGN
- PROPOSED SIGN
- PROPOSED SS CLEANOUT
- EXISTING FIRE HYDRANT
- CAP W/ THRUST BLOCK
- 11.25° ELBOW
- 22.5° ELBOW
- 45° ELBOW
- 90° ELBOW
- ELECTRIC PULL BOX
- PROPOSED FIRE HYDRANT
- PROPOSED WTR METER VAULT
- EXISTING STREET LIGHT
- PROPOSED STREET LIGHT
- PROPOSED MONUMENT
- WATER VALVE (HOLLOW IF EXISTING)
- EXISTING GAS VALVE
- EXISTING METER PIT
- SS & SD MANHOLE (HOLLOW IF EXISTING)
- CATCH BASIN (HOLLOW IF EXISTING)
- FIRE SERVICE
- GUY WIRE
- RIPRAP EROSION CONTROL
- AIR RELEASE VALVE

GENERAL NOTES

1. THE CONTRACTOR SHALL VERIFY IN THE FIELD, ALL ELEVATIONS, DIMENSIONS, FLOW LINES, EXISTING CONDITIONS, AND POINTS OF CONNECTIONS WITH ADJOINING PROPERTY (PUBLIC OR PRIVATE), ANY DISCREPANCIES SHALL BE CALLED TO THE ATTENTION OF THE PROJECT ENGINEER BEFORE PROCEEDING WITH THE WORK.
2. THE CONTRACTOR SHALL KEEP A REDLINE SET OF AS-BUILTS PLANS ON-SITE AND WORK WITH THE PROJECT ENGINEER AT COMPLETION TO ENSURE ACCURATE AS-BUILT DRAWINGS CAN BE GENERATED AND SUBMITTED TO THE CITY OF ELKO AND THE OWNER BY THE PROJECT ENGINEER.
3. THE CONTRACTOR SHALL NOTIFY THE PROJECT ENGINEER, THE SOILS ENGINEER, THE CITY OF ELKO, AND ALL UTILITY COMPANIES 48 HOURS PRIOR TO COMMENCEMENT OF WORK.
4. THE CONTRACTOR SHALL BE RESPONSIBLE FOR ANY AND ALL DAMAGE TO THE EXISTING UTILITIES ENCOUNTERED DURING CONSTRUCTION. IT SHALL BE THE CONTRACTOR'S RESPONSIBILITY TO ONTACT THE UTILITY COMPANIES FOR LOCATIONS PRIOR TO CONSTRUCTION. HORIZONTAL AND VERTICAL LOCATIONS OF EXISTING UTILITIES ARE APPROXIMATE ONLY. THE CONTRACTOR SHALL CALL UNDERGROUND SERVICES ALERT AT 1.800.227.2600 AT LEAST 48 HOURS PRIOR TO EXCAVATION.
5. ALL UTILITY TRENCHES SHALL CONFORM TO SIERRA PACIFIC POWER, SATVIEW BROADBAND LLC, FRONTIER COMMUNICATIONS, AND SOUTHWEST GAS SPECIFICATIONS. CONTRACTOR TO COORDINATE INSTALLATION OF ALLUTILITY TRENCHES WITH LOCAL UTILITIES.
6. CONTRACTOR TO OBTAIN AND PAY FOR PERMITS FROM THE CITY OF ELKO PRIOR TO EXCAVATING WITHIN THE CITY RIGHT-OF-WAY.
7. AT ALL POINTS WHERE SEWER (SANITARY OR STORM), WATER MAINS AND LATERALS CROSS, VERTICAL AND HORIZONTAL SEPARATION SHALL BE MAINTAINED PER NAC. ENGINEER AND CONTRACTOR TO REFERENCE SECTION 445A.6715 TO SECTION 445A.6718 OF THE NEVADA ADMINISTRATIVE CODE FOR UTILITY SEPARATION AND CLEARANCES.
8. ALL SANITARY SEWER MAINS SHALL BE A MIN. OF 8" SDR 35 PVC (GREEN) PIPE. ALL RESIDENTIAL SANITARY SEWER LATERALS SHALL BE A MIN. 4" SDR 35 PVC PIPE WITH A 2% SLOPE MINIMUM UNLESS OTHERWISE SHOWN.
9. ALL WATER MAINS SHALL BE MIN. OF 8" THICK CLASS 50 OR PRESSURE CLASS 350 DUCTILE IRON PIPE WITH POLYETHYLENE ENCASEMENT WRAPPED IN (8 MIL VISQUEEN) OR DR 18 C900 PIPE UNLESS OTHERWISE SHOWN. ALL 4"/6" FIRE SPRINKLER LINES SHALL BE DIP OR DR 18 C900 PIPE.
10. ALL CONSTRUCTION SHALL CONFORM TO AWWA C-600. MINIMUM COVER OVER THE WATER MAIN SHALL BE 42" WITH TRACE WIRE AND WARNING TAPE.
11. THE CITY OF ELKO UTILITY DEPARTMENT SHALL BE CONTACTED TO PERFORM ALL TAPS ONTO CITY OF ELKO UTILITIES.
12. THE CITY OF ELKO UTILITY DEPARTMENT SHALL BE CONTACTED FOR AUTHORIZATION TO PLACE ANY NEW WATER SYSTEMS, EXTENSIONS, REPLACEMENTS IN EXISTING SYSTEMS AND VALVED SECTIONS INTO SERVICE FOR TESTING OR FINAL ACCEPTANCE.
13. ALL WATER SERVICE LINES SHALL BE 2" IRON PIPE SIZE (IPS) RATED 200 PSI POLYETHYLENE DR11 UNLESS OTHERWISE SHOWN.
14. BEFORE BEING CERTIFIED BY AN ENGINEER OR ACCEPTED BY THE CITY OF ELKO, ANY NEW WATER SYSTEMS, EXTENSIONS, REPLACEMENTS IN EXISTING SYSTEMS AND VALVED SECTIONS SHALL BE DISINFECTED IN ACCORDANCE WITH AWWA C-651, "DISINFECTING WATER MAINS".
15. BEFORE BEING CERTIFIED BY AN ENGINEER OR ACCEPTED BY THE CITY OF ELKO, ANY NEW WATER SYSTEMS, EXTENSIONS, REPLACEMENTS IN EXISTING SYSTEMS AND VALVED SECTIONS SHALL BE PRESSURE TESTED INACCORDANCE WITH NAC445A.67145.7 (a) AND (b) AND INSPECTED BY THE CITY OF ELKO.
16. GRADING AROUND BUILDINGS TO BE DONE IN A MANNER AS TO PROVIDE POSITIVE DRAINAGE AWAY FROM BUILDING IN ACCORDANCE WITH CITY OF ELKO REQUIREMENTS.
17. LAND GRADING SHALL BE DONE IN A METHOD TO PREVENT DUST FROM TRAVERSING THE PROPERTY LINE.
18. WATER METERS SHALL BE INSTALLED DURING ANY DEVELOPMENT AND PRIOR TO THE ISSUANCE OF CERTIFICATE OF OCCUPANCY FOR THE PARCELS SHOWN OR SUBSEQUENT DIVISION OF THE PARCELS SHOWN. WATER AND SEWER THROUGHOUT THE DEVELOPMENT WILL BE DEDICATED TO THE CITY OF ELKO UP TO THE WATER METER LOCATIONS. A BLANKET UTILITY EASEMENT SHALL BE GRANTED THROUGHOUT THE PARKING CORRIDOR.
19. ALL EXISTING UTILITY ADJUSTMENTS SHALL BE THE RESPONSIBILITY OF THE CONTRACTOR.
20. ALL EXISTING ASPHALT REMOVAL AND REPLACEMENT SHALL BE THE RESPONSIBILITY OF THE CONTRACTOR.
21. ALL LOTS SHALL BE RESTRICTED TO ACCESS OFF OF CEDAR CREEK WAY.

Avoid cutting underground utility lines. It's costly.

Call before you Dig

1-800-227-2600

UNDERGROUND SERVICE (USA)

STORMWATER POLLUTION PREVENTION NOTES

1) THE CONTRACTOR AND/OR THEIR AUTHORIZED AGENTS SHALL EACH DAY REMOVE ALL SEDIMENT, MUD, CONSTRUCTION DEBRIS, OR OTHER POTENTIAL POLLUTANTS THAT MAY HAVE BEEN DISCHARGED TO, OR ACCUMULATE IN, THE PUBLIC RIGHTS OF WAYS OF THE CITY OF ELKO AS A RESULT OF CONSTRUCTION ACTIVITIES ASSOCIATED WITH THIS SITE DEVELOPMENT OR CONSTRUCTION PROJECT. SUCH MATERIALS SHALL BE PREVENTED FROM ENTERING THE STORM WATER SYSTEM.

2) ADDITIONAL CONSTRUCTION SITE DISCHARGE BEST MANAGEMENT PRACTICES (BMP) MAY BE REQUIRED OF THE OWNER AND HIS OR HER AGENTS DUE TO UNFORESEEN EROSION PROBLEMS OR IF THE SUBMITTED PLAN DOES NOT MEET THE PERFORMANCE STANDARDS SPECIFIED IN THE CITY OF ELKO CONSTRUCTION SITE BEST MANAGEMENT PRACTICES HANDBOOK.

3) TEMPORARY OR PERMANENT STABILIZATION PRACTICES WILL BE INSTALLED ON DISTURBED AREAS AS SOON AS PRACTICABLE AND NO LATER THAN 14 DAYS AFTER THE CONSTRUCTION ACTIVITY IN THAT PORTION OF THE SITE HAS TEMPORARILY OR PERMANENTLY CEASED. SOME EXCEPTIONS MAY APPLY; REFER TO STORM WATER GENERAL PERMIT NVS040000.

4) AT A MINIMUM, THE CONTRACTOR OR HIS AGENT SHALL INSPECT ALL DISTURBED AREAS, AREAS USED FOR STORAGE OF MATERIALS AND EQUIPMENT THAT ARE EXPOSED TO PRECIPITATION, VEHICLE ENTRANCE AND EXIT LOCATIONS AND ALL BMP's WEEKLY, PRIOR TO A FORECASTED RAIN EVENT AND WITHIN 24 HOURS AFTER ANY ACTUAL RAIN EVENT. THE CONTRACTOR OR HIS AGENT SHALL UPDATE OR MODIFY THE STORMWATER POLLUTION PLAN AS NECESSARY. SOME EXCEPTIONS TO WEEKLY INSPECTIONS MAY APPLY, SUCH AS FROZEN GROUND CONDITIONS OR SUSPENSION OF LAND DISTURBANCE ACTIVITIES. REFER TO STORMWATER GENERAL PERMIT SMALL MS4 NVS040000.

5) ACCUMULATED SEDIMENT IN BMP's SHALL BE REMOVED AT REGULAR INTERVALS, WITHIN SEVEN DAYS AFTER A STORMWATER RUNOFF EVENT, AND PRIOR TO THE NEXT ANTICIPATED STORM EVENT. SEDIMENT MUST BE REMOVED WHEN BMP DESIGN CAPACITY HAS BEEN REDUCED BY 50 PERCENT OR MORE.

6) REFER TO CITY OF ELKO CONSTRUCTION SITE BEST MANAGEMENT PRACTICES HANDBOOK (PUBLISHED BY THE CITY OF ELKO, DATED DEC. 2015) FOR DETAILS OF ALL BMP'S SHOWN ON THIS PLAN.

7) THE BMP'S SHOWN ON THIS PLAN ARE SCHEMATIC ONLY. FINAL BMP SELECTION AND LOCATION SHALL BE DETERMINED BY THE SITE OPERATOR OR THE OWNER'S REPRESENTATIVE.

8) THE CONTRACTOR SHALL SUBMIT TO THE NEVADA DEPARTMENT OF ENVIRONMENTAL PROTECTION (NDEP) FOR STORM WATER DISCHARGE PERMIT. THE CONTRACTOR SHALL SIGN THE NOTICE OF INTENT FOR THE PROPOSED PROJECT.

9) ALL EROSION CONTROL MEASURES SHALL CONFORM TO THE GUIDELINES OUTLINED IN THE CITY OF ELKO CONSTRUCTION SITE BEST MANAGEMENT PRACTICE HANDBOOK 2005 EDITION. A COPY OF THIS MANUAL TO BE ON-SITE AT ALL TIMES.

10) ALL CONSTRUCTION SHALL CONFORM TO THE 2016 EDITION OF THE "STANDARD SPECIFICATION FOR PUBLIC WORKS CONSTRUCTION." CONTRACTOR TO KEEP A COPY OF THE SPECIFICATION ON THE JOB SITE AT ALL TIMES

EROSION CONTROL NOTES

1. ALL PUBLIC RIGHT OF WAYS LOCATED ADJACENT TO THE SITE (E.G. STREETS AND SIDEWALKS) MUST BE CLEANED DAILY OF ALL SEDIMENT OR WASTES THAT ORIGINATE FROM THE SITE.
2. BMPS IN ADDITION TO THOSE INDICATED IN THE STORM WATER POLLUTION PREVENTION PLAN (SWPPP) MAY BE REQUIRED IF THEY DO NOT MEET THE CITY OF ELKO PERFORMANCE STANDARDS.
3. TEMPORARY OR PERMANENT STABILIZATION MUST BE APPLIED NO LATER THAN 14 DAYS TO ALL DISTURBED SOILS, INCLUDING STOCKPILES, WHERE CONSTRUCTION ACTIVITY HAS CEASED.
4. ALL BMPS MUST BE INSPECTED WEEKLY, PRIOR TO FORECASTED RAIN EVENTS, AND WITHIN 24 HOURS AFTER ANY EVENT THAT CREATES RUNOFF AT THE SITE.
5. ACCUMULATED SEDIMENT MUST BE REMOVED FROM BMPS WHEN THE DESIGN CAPACITY HAS BEEN REDUCED BY 50 PERCENT OR MORE. SEDIMENT MUST ALSO BE REMOVED WITHIN SEVEN DAYS AFTER A RUNOFF EVENT OR PRIOR TO THE NEXT FORECASTED EVENT, WHICHEVER IS EARLIER.
6. ALL BEST MANAGEMENT PRACTICES (BMP'S) SHALL BE IN ACCORDANCE WITH THE "CITY OF ELKO CONSTRUCTION SITE BEST MANAGEMENT PRACTICES HANDBOOK", DATED DECEMBER 2005, AND AVAILABLE THROUGH THE CITY OF ELKO.
7. PRIOR TO THE START OF CONSTRUCTION, THE CONTRACTOR SHALL HAVE IN PLACE ALL NECESSARY BEST MANAGEMENT PRACTICES THAT SHALL BE USED TO MINIMIZE DUST, PREVENT EROSION, AND PREVENT POLLUTION LADEN RUNOFF FROM ENTERING THE ADJACENT STORM DRAIN FACILITIES. THE CONTRACTOR SHALL MAINTAIN, REPAIR, REPLACE, SUBSTITUTE, OR SUPPLEMENT BMP'S AT THE CONSTRUCTION SITE AS CONDITIONS WARRANT DURING CONSTRUCTION. BMP'S MAY INCLUDE, BUT NOT BE LIMITED TO, THE FOLLOWING BMP'S: (1) SILT FENCING OR STRAW WADDLES AT THE DOWNHILL LIMITS OF GRADING, (2) STABILIZED CONSTRUCTION SITE ENTRY/EXIT, (3) PERMANENT SLOPE REVEGETATION ON ALL DISTURBED AREAS, (4) INLET PROTECTION AT EXISTING CATCH BASINS, (5) STOCKPILE MANAGEMENT BMP'S, (7) A CONCRETE WASHOUT AREA, AND (8) MEASURES TO PROTECT EXISTING NATIVE VEGETATION.

SIGNAGE & STRIPING NOTES

1. ALL SIGNAGE AND PAVEMENT MARKINGS SHALL COMPLY WITH STANDARD SPECIFICATIONS FOR PUBLIC WORKS CONSTRUCTION, PROJECT SPECIFICATIONS, THESE PLANS, AND THE MOST CURRENT EDITION OF THE MANUAL FOR UNIFORM TRAFFIC CONTROL DEVICES (M.U.T.C.D.).
2. PARKING LOT STRIPING AND PAVEMENT MARKINGS SHALL BE INSTALLED AFTER APPLICATION AND CURING OF SLURRY SEAL. ASPHALT SURFACE SHALL BE CLEAN AND DRY PRIOR TO APPLICATION OF ANY PARKING LOT STRIPING, SYMBOLS, AND OTHER PAVEMENT MARKINGS.
3. CONTRACTOR SHALL VERIFY LOCATION OF EXISTING AND PROPOSED UTILITY LOCATIONS PRIOR TO INSTALLATION OF SIGNAGE.
4. SIGNAGE SHOWN ON THIS PLAN DOES NOT INCLUDE TRAFFIC CONTROL THAT MAY BE REQUIRED PRIOR TO AND DURING CONSTRUCTION. THE CONTRACTOR SHALL BE RESPONSIBLE FOR ANY TRAFFIC CONTROL THAT MAY BE REQUIRED DURING CONSTRUCTION.
5. ANY ADDITIONAL SIGNAGE AND STRIPING NEEDED SHALL BE THE RESPONSIBILITY OF THE CONTRACTOR

SLOPE STABILIZATION

1) ALL DISTURBBED SLOPES STEEPER THAN 3:1 SHALL BE RIPRAPPED. RIPRAP SHALL BE RUN OF MINE OR UNSCREENED.

2) ALL SLOPES 3:1 OR LESS SHALL BE PLANTED AS FOLLOWS:

   a. HAND SPREAD ENTIRE SEEDED AREA.
   b. IRRIGATION IS TO MATCH THE AVAILABLE WATER HOLDING CAPACITY OF THE SOIL (AWC) FOR EACH SLOPE TAKING INTO ACCOUNT THE PLANT CONSUMPTIVE USE PLUS A FACTOR FOR IRRIGATION SYSTEM EFFICIENCY.
   c. PROVIDE TEMPORARY IRRIGATION UNTIL VEGETATION IS ESTABLISHED.

3) PROTECT EXISTING AND PROPOSED DRAINAGE INLETS DURING CONSTRUCTION IN ACCORDANCE WITH THE FOLLOWING DETAILS:

   a. STORMDRAIN INLET PROTECTION - (BMP DP-3)
   b. CATCH BASIN FILTERS (BMP- DP-4)

4) MAINTENANCE

   a. EXCLUDE FOOT TRAFFIC AS MUCH AS POSSIBLE DURING PLANT ESTABLISHMENT.

   b. AREAS THAT FAIL TO RESPOND OR BECOME DAMAGED SHOULD BE TREATED AGAIN USING SAME TREATMENT INITIALLY APPLIED

5) RECLAMATION SEED MIX (TOTAL 60 BULK POUNDS PER ACRE):

	SPECIES	BULK POUND PER ACRE
1.	BIG SAGEBRUSH	4.0
2.	RABBITBRUSH	4.0
3.	BITTERBRUSH	4.0
4.	INDIAN RICEGRASS	5.0
5.	GREAT BASIN WILDRYE	5.0
6.	COVER SHEEP FESCUE	10.0
7.	SODAR STREAMBANK WHEATGRASS	9.0
8.	ANNUAL RYEGRASS	15.0
9.	PURPLE SAGE (SALVIA DORII)	1.0
10.	FOUR WING SALTBRUSH	1.0

6) FERTILIZER
   16-16-8 400/ACRE

7) TOPSOIL AND VEGETATIVE STRIPPINGS SHALL BE STOCKPILED FOR REAPPLICATION TO ALL DISTURBED AREAS.

8) PLANTING MIX (A MIXTURE OF THE FOLLOWING COMPONENTS MEASURED BY VOLUME):

   a. 60% NATURAL SOIL
   b. 30% SOIL CONDITIONER / COMPOST
      10% AXIS SOIL CONDITIONER

LEGEND

- AND — STORM DRAIN INLET PROTECTION (DP-3 AND DP-4)
- GRAVEL OR SAND BAG BARRIERS (BMP SC-3)
- CWM — HANDLING AND DISPOSAL OF CONCRETE AND CEMENT (BMP GM-9)
- SWM — SOLID AND DEMOLITION WASTE MANAGEMENT (BMP GM-3)
- CONSTRUCTION SITE ENTRANCE & EXIT (BMP SC-8)
- RIPRAP MECHANICAL STABILIZATION (BMP EC-7)
- FIBER ROLLS (BMP SC-1), SILT FENCE (BMP SC-5), SYNTHETIC SEDIMENT CONTROL ROLLS (BMP SC-11)
- STREET SWEEPING (BMP GM-5)
- STORM DRAIN OUTLET PROTECTION (BMP DP-2)
- RVG — REVEGETATION (BMP EC-8)
- AC PAVEMENT AREA
- TYPE 2 BASE GRAVE 95% MDD
- 4900 — EXISTING CONTOUR LINE
- 4900 — PROPOSED CONTOUR LINE
- (BMP SC-4) — BMP'S OUTLINED IN THE CITY OF ELKO CONSTRUCTION SITE BEST MANAGEMENT PRACTICE (BMP) HANDBOOK 2005 EDITION

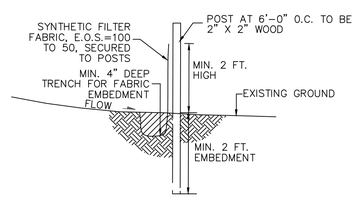

SILT FENCE

SUMMIT ENGINEERING CORPORATION
1150 LAMOILLE HIGHWAY, ELKO, NV 89801
PHONE:(775) 738-8068 FAX:(775) 747-8559

May 3, 2021

REV.	DATE	DESCRIPTION	BY	APP'D

CIVIL IMPROVEMENTS PLANS FOR CEDAR ESTATES SUBDIVISIION ~ UNIT NO. 3

GENERAL NOTES SHEET

ELKO COUNTY NEVADA

ELKO

DESIGNED BY: C 3D
CHECKED BY: NIB

SCALE
HORIZ: 1"=40'
VERT: NONE

JOB NO: 81966

NITIN I. BHAKTA — Exp. 12-31-22 — CIVIL — No. 15494 — STATE OF NEVADA — PROFESSIONAL ENGINEER — 10-25-21

SHEET N-1 OF 13

L:\Nitin\Dwgs\81966_Cedar Estates_Bailey\CIVIL\81966_CEDAR CREEK ESTATES NITIN.dwg

FINAL MAP OF

CEDAR ESTATES SUBDIVISION~ UNIT NO. 3

RYAN G. COOK
EXPIRES 12/31/22
PROFESSIONAL LAND SURVEYOR
STATE OF NEVADA
PRESS No. 15224

10-22-2021

DIVISION OF WATER RESOURCES CERTIFICATE

THIS PLAT IS APPROVED BY THE DIVISION OF WATER RESOURCES OF THE DEPARTMENT OF CONSERVATION AND NATURAL RESOURCES CONCERNING WATER QUANTITY, SUBJECT TO REVIEW OF APPROVAL ON FILE IN THIS OFFICE.

_____ _____
DIVISION OF WATER RESOURCES DATE

NEVADA DIVISION OF ENVIRONMENTAL PROTECTION

THIS FINAL MAP IS APPROVED BY THE DIVISION OF ENVIRONMENTAL PROTECTION OF THE DEPARTMENT OF CONSERVATION AND NATURAL RESOURCES. THIS APPROVAL CONCERNS SEWAGE DISPOSAL, WATER POLLUTION, WATER QUALITY, AND WATER SUPPLY FACILITIES AND IS PREDICATED UPON PLANS FOR A PUBLIC WATER SUPPLY AND A COMMUNITY SYSTEM FOR DISPOSAL OF SEWAGE.

_____ _____
BUREAU OF WATER POLLUTION CONTROL DATE

ELKO CITY COUNCIL CERTIFICATE

AT A REGULAR MEETING OF THE ELKO CITY COUNCIL HELD ON THE _____ DAY OF _____ 20___, THIS MAP WAS APPROVED FOR SUBDIVISION PURPOSES PURSUANT TO N.R.S. 278.461 THROUGH 278.469, INCLUSIVE, AND ALL APPLICABLE LOCAL ORDINANCES. ALL OFFERS OF DEDICATION SHOWN HEREON WERE ACCEPTED FOR PUBLIC USE.

_____ _____
MAYOR, CITY OF ELKO DATE

_____ _____
ATTEST: CLERK, CITY OF ELKO DATE

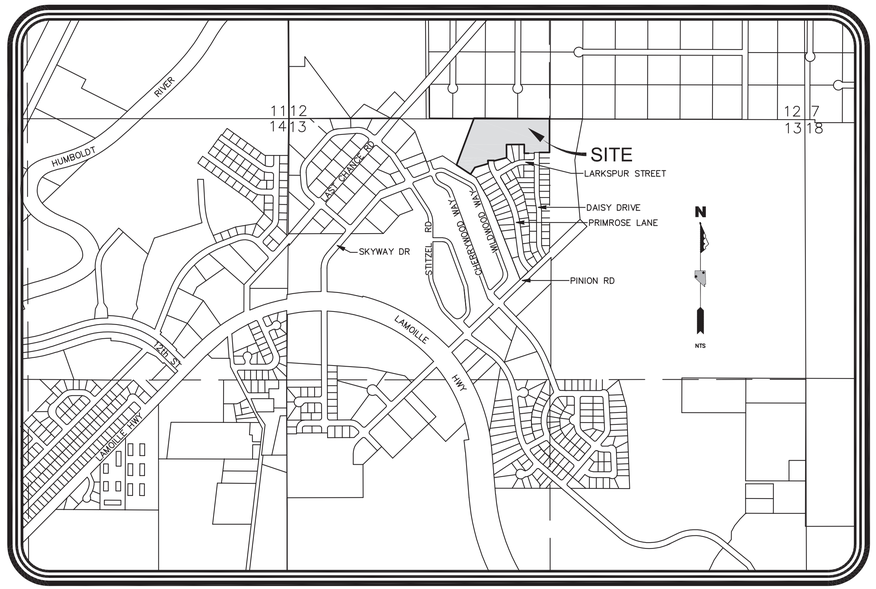

VICINITY MAP

(NOT TO SCALE)

SURVEYOR'S CERTIFICATE

I, RYAN G. COOK, A PROFESSIONAL LAND SURVEYOR LICENSED IN THE STATE OF NEVADA, CERTIFY THAT:

1. THIS IS A TRUE AND ACCURATE REPRESENTATION OF THE LANDS SURVEYED UNDER MY SUPERVISION AT THE INSTANCE OF BAILEY & ASSOCIATES, LLC, A NEVADA LIMITED LIABILITY COMPANY.
2. THE LANDS SURVEYED LIE WITHIN THE NORTHWEST QUARTER OF SECTION 13, TOWNSHIP 34 NORTH, RANGE 55 EAST, M.D.M.
3. THIS PLAT COMPLIES WITH THE APPLICABLE STATE STATUTES AND ANY LOCAL ORDINANCES IN EFFECT ON THE DATE THAT THE GOVERNING BODY GAVE ITS FINAL APPROVAL.
4. THE MONUMENTS DEPICTED ON THE PLAT WILL BE OF THE CHARACTER SHOWN AND OCCUPY THE POSITIONS INDICATED BY _____, 202___ AND APPROPRIATE FINANCIAL GUARANTEE WILL BE POSTED WITH THE GOVERNING BODY BEFORE RECORDATION TO ENSURE THE INSTALLATION OF THE MONUMENTS.

PROFESSIONAL LAND SURVEYOR STATE OF NEVADA RYAN G. COOK EXPIRES 12/31/22 No. 15224

_____ _____
RYAN G. COOK PLS 15224

ELKO CITY PLANNING COMMISSION CERTIFICATE

AT THE REGULAR MEETING OF THE PLANNING COMMISSION OF THE CITY OF ELKO, STATE OF NEVADA, HELD ON THE _____ DAY OF _____, 20___, A TENTATIVE MAP OF THIS SUBDIVISION WAS DULY AND REGULARLY APPROVED PURSUANT TO N.R.S. 278.330 AND THIS FINAL MAP SUBSTANTIALLY COMPLIES WITH SAID TENTATIVE MAP AND ALL CONDITIONS PURSUANT THERETO HAVE BEEN MET.

_____ _____
CHAIRMAN, ELKO CITY PLANNING COMMISSION DATE

REFERENCES

1. THE MAP OF REVERSION BY CEDAR ESTATES, LLC. OF CEDAR ESTATES SUBDIVISION, UNIT NO. 1, LOTS 101–113, 201–214, 315, 402, 403, 501, 502, AND PARCEL A, FILED IN THE OFFICE OF THE ELKO COUNTY RECORDER AS FILE NO. 469127, ON APRIL 23, 2001.
2. THE BOUNDARY LINE ADJUSTMENT RECORD OF SURVEY FOR CEDAR ESTATES, LLC. & MARIA TARABINI, RECORDED IN THE OFFICE OF THE ELKO COUNTY RECORDER AS FILE NO. 548515, ON FEBRUARY 9, 2006.
3. THE PARCEL MAP FOR CEDAR ESTATES, LLC. RECORDED IN THE OFFICE OF THE ELKO COUNTY RECORDER AS FILE NO. 530117, ON JANUARY 28, 2005.
4. THE FINAL MAP OF CEDAR ESTATES SUBDIVISION UNIT NUMBER 1, RECORDED IN THE OFFICE OF THE ELKO COUNTY RECORDER AS FILE NO. 412903, ON AUGUST 27, 1997.
5. THE FINAL MAP OF CEDAR ESTATES SUBDIVISION UNIT NUMBER 2, RECORDED IN THE OFFICE OF THE ELKO COUNTY RECORDER AS FILE NO. 691815, ON OCTOBER 30, 2014.

NOTES

1 – THIS MAP DIVIDES "REMAINDER PARCEL A" AS SHOWN ON THE FINAL MAP OF CEDAR ESTATES SUBDIVISION UNIT NO. 2 FOR BAILEY & ASSOCIATES, LLC, RECORDED IN THE OFFICE OF THE ELKO COUNTY RECORDER AS FILE NO. 691815, ON OCTOBER 30, 2014.

2 – IN ADDITION TO THE EXISTING EASEMENTS AND THE EASEMENTS SHOWN, A 5' WIDE PUBLIC UTILITY AND PRIVATE DRAINAGE EASEMENT WILL BE GRANTED ALONG ALL SIDE AND REAR LOT LINES AND A 7.5' WIDE PUBLIC UTILITY AND PRIVATE DRAINAGE EASEMENT WILL BE GRANTED ALONG ALL PROPOSED STREET RIGHTS–OF–WAY.

3 – PER THE CITY OF ELKO, THE PROPOSED SUBDIVISION COMPLIES WITH ALL OTHER RELEVANT SECTIONS OF CITY CODE WITH THE EXCEPTION OF: a. LOTS 4, 5, 13, 14, 21, 22, 23 AND 25 ARE LOCATED ON CURVED PORTIONS OF THE STREETS AND HAVE SHORT FRONT LOT WIDTHS. A MODIFICATION OF STANDARDS IS REQUIRED TO MAKE THESE LOTS CONFORM.

4 – TOTAL AREAS:
SUBDIVIDED = 7.31 ACRES
LOTS = 6.00 ACRES
RIGHT–OF–WAY = 1.31 ACRES

NV ENERGY CERTIFICATE

A PUBLIC UTILITY EASEMENT IS HEREBY GRANTED TO NV ENERGY WITHIN EACH PARCEL FOR THE EXCLUSIVE PURPOSE OF INSTALLING AND MAINTAINING UTILITY SERVICE FACILITIES TO THAT PARCEL, WITH THE RIGHT TO EXIT THAT PARCEL WITH SAID UTILITY FACILITIES FOR THE PURPOSE OF SERVING ADJACENT PARCELS, AT LOCATIONS MUTUALLY AGREED UPON BY THE OWNER OF RECORD AT THE TIME OF INSTALLATION AND THE UTILITY COMPANY.

_____ _____
SIERRA PACIFIC POWER COMPANY DATE
D.B.A. NV ENERGY

PRINTED NAME_____

SOUTHWEST GAS CERTIFICATE

A PUBLIC UTILITY EASEMENT IS HEREBY GRANTED TO SOUTHWEST GAS WITHIN EACH PARCEL FOR THE EXCLUSIVE PURPOSE OF INSTALLING AND MAINTAINING SERVICE FACILITIES TO THAT PARCEL, WITH THE RIGHT TO EXIT THAT PARCEL WITH SAID UTILITY FACILITIES FOR THE PURPOSE OF SERVING ADJACENT PARCELS.

_____ _____
SOUTHWEST GAS CORPORATION DATE

PRINTED NAME_____

UTILITY COMPANIES CERTIFICATE

THE PUBLIC UTILITY EASEMENTS, ARE APPROVED BY THE RESPECTIVE PUBLIC UTILITIES EXECUTED BELOW.

_____ _____
FRONTIER DATE

_____ _____
ZITO MEDIA DATE

OWNER'S CERTIFICATE

KNOWN OF ALL MEN BY THESE PRESENTS THAT THE UNDERSIGNED, DOUGLAS W. BAILEY, MANAGER OF BAILEY AND ASSOCIATES, A NEVADA LIMITED LIABILITY COMPANY, BEING THE OWNER OF THE PARCELS SHOWN ON THIS MAP, DOES HEREBY CONSENT TO THE PREPARATION AND FILING OF THIS MAP AND OFFER FOR DEDICATION ALL OF THE EASEMENTS AND RIGHT–OF–WAYS FOR PUBLIC ACCESS, UTILITY AND DRAINAGE PURPOSES AS DESIGNATED HEREON. IN WITNESS I, DOUGLAS W. BAILEY, MANAGER OF BAILEY AND ASSOCIATES LLC., SET MY HAND THIS _____ DAY OF _____, 20___.

_____,
DOUGLAS W. BAILEY
MANAGER OF BAILEY AND ASSOCIATES LLC.

STATE OF NEVADA)

) S.S.

COUNTY OF ELKO)

ON THIS _____ DAY OF _____, 20___, PERSONALLY APPEARED BEFORE ME, A NOTARY PUBLIC, DOUGLAS W. BAILEY, PERSONALLY KNOWN (OR PROVED) TO ME TO BE THE PERSON WHOSE NAME IS SUBSCRIBED TO THE ABOVE INSTRUMENT WHO ACKNOWLEDGED THAT HE EXECUTED THE FOREGOING INSTRUMENT.

_____
NOTARY PUBLIC IN AND FOR ELKO COUNTY, NEVADA

(MY COMMISSION EXPIRES:_____)

COUNTY ASSESSOR'S CERTIFICATE

I, JANET IRIBARNE, CERTIFY THAT THE ASSESSOR'S PARCEL NUMBERS SHOWN ON THIS PLAT ARE CORRECT AND THAT THE PROPOSED PARCELS ARE A DIVISION OF ASSESSOR'S PARCEL NO. 001–926–111

_____ _____
JANET IRIBARNE, ELKO COUNTY ASSESSOR DATE

COUNTY TREASURER'S CERTIFICATE

I, CHERYL PAUL, CERTIFY THAT ALL PROPERTY TAXES ON PARCEL NO. 001–926–111 HAVE BEEN PAID FOR THE FISCAL YEAR _____.

_____ _____
CHERYL PAUL, COUNTY TREASURER DATE

CITY ENGINEER'S CERTIFICATE

I, _____, ENGINEER FOR THE CITY OF ELKO, DO HEREBY CERTIFY THAT I HAVE EXAMINED THIS MAP AND FIND IT SUBSTANTIALLY THE SAME AS IT APPEARED ON THE TENTATIVE MAP WITH ALL APPROVED ALTERATIONS AND THAT ALL PROVISIONS OF N.R.S. 278.010 THROUGH 278.630, INCLUSIVE, AND ALL LOCAL ORDINANCES APPLICABLE AT THE TIME OF APPROVAL OF THE TENTATIVE MAP HAVE BEEN COMPLIED WITH, AND THAT I AM SATISFIED THIS MAP IS TECHNICALLY CORRECT AND THAT THE MONUMENTS AS SHOWN ARE OF THE CHARACTER AND OCCUPY THE POSITIONS INDICATED.

_____ _____
ENGINEER FOR THE CITY OF ELKO DATE

FILE No._____
FILED AT THE REQUEST OF
SUMMIT ENGINEERING CORP.
DATE: _____, 2021
TIME: _____ __M.

_____
D. MIKE SMALES
ELKO COUNTY RECORDER

October 11, 2021

FINAL MAP
OF
CEDAR ESTATES SUBDIVISION
UNIT NO. 3
FOR BAILEY & ASSOCIATES, LLC.

SEC 13, T34N, R55E, M.D.B. & M.

ELKO ELKO COUNTY NEVADA

81966_Cedar_Estates_Unit_3.dwg

SUMMIT ENGINEERING CORPORATION
1150 LAMOILLE HWY.
ELKO, NV. 89801
PHONE: (775) 738-8058
FAX: (775) 738-8267
elko@summitnv.com

SHEET 1
OF 2

0 40 80 120 160 200

N

1" = 40'

LAST CHANCE RANCH SUBDIVISION - UNIT NO. 3
NOT A PART
ZONE = AGRICULTURAL / RESIDENTIAL

RODRIGUEZ
LOT 40 MAP 032-000
APN 032-001-040

RODRIGUEZ
LOT 41 MAP 032-000
APN 032-001-041

RODRIGUEZ
LOT 42 MAP 032-000
APN 032-001-042

RODRIGUEZ
LOT 43 MAP 032-000
APN 032-001-043

OWL ROAD (COUNTY)

ELKO COUNTY
ELKO CITY LIMIT

N 89°31'37" E 631.42

FOUND 5/8" REBAR AND CAP – PLS 6203

REMINGTON CONSTRUCTION
APN: 001-920-039
NOT A PART
ZONE = LI

7.5' P.U.E. PER PLAT

LOT 14 [10,946± SF] | LOT 13 [6,629± SF] | LOT 12 [6,599± SF] | LOT 11 [6,599± SF] | LOT 10 [6,599± SF] | LOT 9 [6,599± SF] | LOT 8 [6,599± SF] | LOT 7 [6,599± SF] | LOT 6 [6,599± SF] | LOT 5 [6,666± SF]

CITY OF ELKO
PER MAP 691815
APN: 001-926-110
NOT A PART
ZONE = RMH

N 89°31'37" E 141.26

ELKO COUNTY
ELKO CITY LIMIT

1/4 CORNER
SECTIONS 12 AND 13
FOUND 3 1/2" BRASS CAP
STATE OF NEVADA, DEPARTMENT
OF HIGHWAYS, DATED 1949.

HUMBOLDT READY MIX
FILE NO. 341655
APN: 001-920-020
NOT A PART
ZONE = GI

PRIMROSE LANE

N 89°31'37" E 474.61

OFFERED FOR DEDICATION TO THE CITY OF ELKO
[56,731± SF]

N 89°31'37" E 474.44

LOT 15 [8,270± SF] | LOT 16 [6,181± SF] | LOT 17 [7,320± SF] | LOT 18 [10,369± SF]

LOT 25 [6,061± SF] | LOT 26 [6,061± SF] | LOT 27 [6,061± SF] | LOT 28 [6,061± SF] | LOT 29 [6,061± SF] | LOT 30 [6,061± SF] | LOT 31 [6,061± SF]

LOT 32 [7,107± SF] | LOT 33 [6,060± SF] | LOT 34 [6,060± SF]

LOT 4 [8,959± SF] | LOT 3 [6,624± SF] | LOT 2 [6,605± SF] | LOT 1 [6,602± SF]

DAISY DRIVE

LOT 24 [6,804± SF] | LOT 23 [6,360± SF] | LOT 22 [8,440± SF] | LOT 21 [12,463± SF]

4'x12' USPS GANG BOX EASEMENT GRANTED HEREON

CASTANEDA - SALAS
LOT 16 SUB 548514
APN 001-926-090

ROLF
LOT 17 SUB 548514
APN 001-926-091

CASTRO
LOT 18 SUB 548514
APN 001-926-092

GONZALES
LOT 19 SUB 548514
APN 001-926-093

PAYNTER
LOT 20 SUB 548514
APN 001-926-094

LOT 19 [13,464± SF]

LOT 20 [20,643± SF]

EXISTING 7.5' PUBLIC UTILITY AND DRAINAGE EASEMENT PER FILE NO. 469127

HYDE
LOT 16 SUB 548515
APN 001-926-016

HECKETHORN
LOT 14 SUB 443793
APN 001-926-014

CEDAR ESTATES SUBDIVISION
UNIT NUMBER 1
FILE NO. 412903
NOT A PART
ZONE = RMH

CEDAR ESTATES SUBDIVISION
UNIT NUMBER 2
FILE NO. 691815
NOT A PART
ZONE = RMH

SOUTHGATE MOBILE HOME PARK
FILE NO. 248564
NOT A PART
ZONE = RMH

LARKSPUR STREET

FOUND 5/8 REBAR AND CAP PLS 5072

N 89°57'47" W 60.00

S 84°12'17" W (R)

S 75°32'45" W 130.75

S 73°31'07" W 137.55

N 56°40'28" W 170.96

S 33°31'07" W 64.30

N 89°57'47" W 153.24

S 74°54'18" W (R)

N 89°57'47" W 47.64

N 89°57'47" W 47.98

S 76°32'23" W 233.75

N 69°35'00" W 103.00

N 69°35'00" W 103.38

S 74°02'33" E (R)

N 20°25'00" E 84.33

N 20°25'00" E 84.43

N 20°25'00" E 495.19

N 49°48'20" W 114.39

S 19°27'25" E (R)

S 00°02'13" E 631.56

S 00°02'13" W 266.43

S 00°01'03" E 161.25

S 00°02'13" E 130.69

S 00°02'13" W 76.35

N 89°57'47" W 112.73

N 89°57'47" W 110.11

N 89°57'47" W 110.06

N 89°57'47" W 100.89

N 89°57'47" W 100.95

N 89°57'47" W 160.00

N 89°57'47" W 101.00

S 89°31'37" W 178.58

N 89°31'37" E 474.61

N 89°31'37" E 84.51

N 89°31'37" E 62.00

N 89°31'37" E 62.00

N 89°31'37" E 78.81

S 89°31'37" W 178.58

N 89°31'37" E 474.61

N 89°31'37" E 474.44

N 89°31'37" E 631.42

N 89°31'37" E 141.26

S 00°02'13" E 631.56

S 00°02'13" W 266.43

S 00°02'13" W 76.35

N 74°26'27" E (R)

N 13°34'10" E (R)

N 76°51'10" E 125.82

S 16°27'25" E (R)

S 19°27'25" E (R)

S 17°52'54" E (R)

S 84°12'17" W (R)

S 74°54'18" W (R)

S 33°31'07" W (R)

N 89°57'47" W (R)

S 89°57'47" E (R)

S 00°02'13" W (R)

N 00°02'13" E (R)

S 00°02'13" E (R)

S 00°01'03" E (R)

S 00°02'13" E 69.45

N 00°02'13" E 69.45

N 00°02'13" E 42.51

N 00°02'13" E 36.20

N 00°02'13" E 103.12

N 00°02'13" E 91.31

N 00°02'13" E 126.06

S 00°02'13" E 130.69

S 00°01'03" E 161.20

S 00°01'03" E 161.25

S 00°02'13" E 91.78

S 00°02'13" E 68.89

S 00°02'13" W 101.02

S 00°28'23" E 101.02

S 00°28'23" E 101.98

S 00°28'23" E 101.98

S 00°28'23" E 103.86

S 00°28'23" E 103.98

S 00°28'23" E 103.98

S 00°28'23" E 103.98

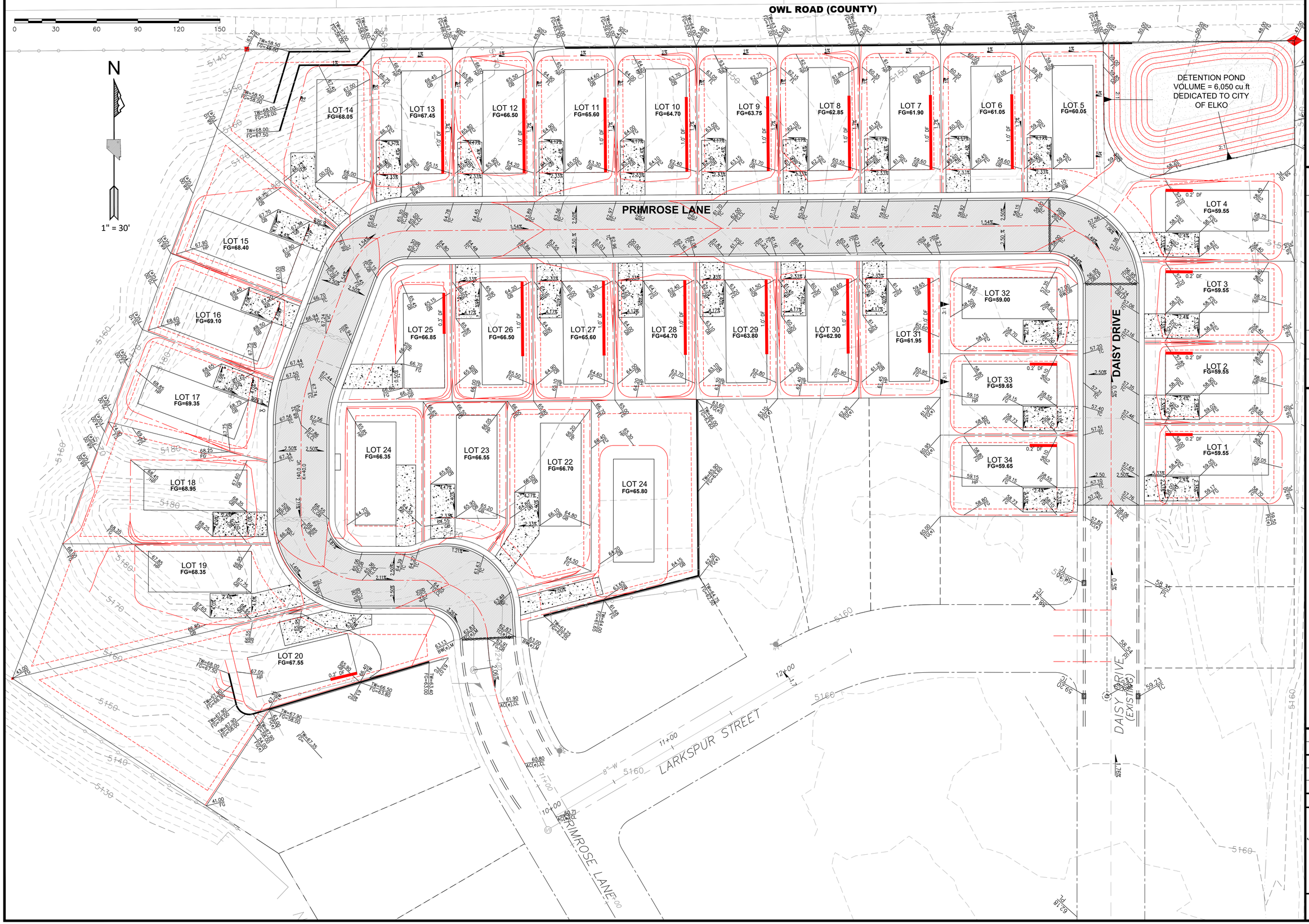

SUMMIT ENGINEERING CORPORATION
1150 LAMOILLE HIGHWAY, ELKO, NV. 89801
PHONE:(775) 738-8058 FAX:(775) 747-8559

May 19, 2021

REV.	DATE	DESCRIPTION	BY	APP'D
1	5-28-21	CITY COMMENTS REVISIONS	NIB	NIB

CIVIL IMPROVEMENTS PLANS FOR CEDAR ESTATES SUBDIVISIION ~ UNIT NO. 3

GRADING PLAN

ELKO COUNTY NEVADA

DESIGNED BY: CIVIL 3D
CHECKED BY: NIB
SCALE
HORIZ: 1"=40'
VERT: NONE
JOB NO: 81966

PROFESSIONAL ENGINEER STATE OF NEVADA
NITIN I. BHAKTA
Exp. 12-31-22
CIVIL
No. 15494
10-25-21

SHEET G-1 OF 13

L:\Ndrive\Dwgs\81966_Cedar Estates_Bailey\CIVIL\81966_CEDAR CREEK ESTATES NITIN.dwg

0 30 60 90 120 150

N

1" = 30'

OWL ROAD (COUNTY)

PRIMROSE LANE

LOT 1 LOT 2 LOT 3 LOT 4 LOT 5 LOT 6 LOT 7 LOT 8 LOT 9 LOT 10 LOT 11 LOT 12 LOT 13 LOT 14 LOT 15 LOT 16 LOT 17 LOT 18 LOT 19 LOT 20 LOT 22 LOT 23 LOT 24 LOT 25 LOT 26 LOT 27 LOT 28 LOT 29 LOT 30 LOT 31 LOT 32 LOT 33 LOT 34

"PL" STA 9+33.67–30.00 RT.
PROPOSED SDMH #1
48"ø TYPE 1
RIM=5157.80
IE IN 24"=5149.70
IE 24" OUT=5149.50
(REF DET SHT)

DETENTION POND
VOLUME = 5,950 cu ft

CONST 50 LF OF 24" N-12 HDPE SD OUTLET W/ FLARED END SECTION INSTALL 10' X 20' RIPRAP OUTLET PROTECTION W/ WEED BARRIER UNDER RIPRAP, 10" TO 12" DIA. IE 24" OUT=5149.00 Qcap=26.40 cfs – V=8.60 fps (REF DET SHT)

50 LF 24" N-12 SD PIPE

WATERLINE X-ING SD MAIN AREA OF SPECIAL CONSTORUCTION (REF DET SHT)

PROPOSED 45° ELBOW & 22.5° ELBOW TYP. W/ THRUST BLOCKS

"PL" STA 5+50.00–8.00 LT
PROPOSED 8" ISOLATION GATE VALVE

PROPOSED 4" SS LATERALS TYP.

515 LF C900 DR-18 WATERMAIN

255 LF 8" SDR-35 SEWERMAIN

255 LF 8" SDR-35 SEWERMAIN

SS 8"

"PL" STA 4+32.67–27.00 RT.
PROPOSED FIRE HYDRANT ASSEMBLY
1 – 6" GATE VALVE
1– 8"x6" TEE
1– 30 LF OF 6" DR18 PIPE W/ THRUST BLOCK
(REF DET SHT)

PROPOSED 1" WATER METER PIT AND METER ASSEMBLY TYP.

"PL" STA 6+77.12–11.00 RT.
PROPOSED SSMH #5
48"ø TYPE 1
RIM=5161.50
IE IN 8"=5155.05
IE 8" OUT=5154.95
(REF DET SHT)

"PL" STA 8+37.45–27.00 RT.
PROPOSED FIRE HYDRANT ASSEMBLY
1 – 6" GATE VALVE
1– 8"x6" TEE
1– 30 LF OF 6" DR18 PIPE W/ THRUST BLOCK
(REF DET SHT)

"PL" STA 9+40.63 – 0.50 LT.
PROPOSED SSMH #6
48"ø TYPE 1
RIM=5157.80
IE IN 8"=5151.05
IE 8" OUT=5150.95
(REF DET SHT)

"PL" STA 4+05.37–4.90 RT.
PROPOSED SSMH #4
48"ø TYPE 1
RIM=5165.85
IE IN 8"=5159.20
IE 8" OUT=5159.10
(REF DET SHT)

"PL" STA 9+40.63 – 20.50 RT. & LT.
PROPOSED DUAL TYPE 4R DROP INLETS 36"x24"
TC=5156.95
RIM=5156.25
IE OUT 18"=5153.00
CONNECT BOTH DROP INLETS W/ 18" PIPES ±3LF

INSTALL 2–24" X 18" TEE FITTINGS W/ WATERTIGHT GASKETS AND CONNECTIONS

PROPOSED 4" SS LATERALS TYP.

PROPOSED 1" WATER METER PIT AND METER ASSEMBLY TYP.

1180 LF 8" SDR-35 SEWERMAIN

225 LF 24" N-12 HDPE SD PIPE

DAISY DRIVE

178 LF C900 DR-18 WATERMAIN

"PL" STA 2+74.16–11.60 RT.
PROPOSED SSMH #3
48"ø TYPE 1
RIM=5167.50
2~IE 8" OUT=5161.00
(REF DET SHT)

"PL" STA 2+67.30–28 LT.
CONST AIR RELEASE VALVE
(REF DET SHT)

PROPOSED 11.25° ELBOW W/ THRUST BLOCKS TYP.

"PL" STA 1+56.24–3.80 RT.
PROPOSED SSMH #2
48"ø TYPE 1
RIM=5166.10
IE IN 8"=5159.40
IE 8" OUT=5150.30
(REF DET SHT)

"PL" STA 1+16.24–27.00 RT.
PROPOSED FIRE HYDRANT ASSEMBLY
1 – 6" GATE VALVE
1– 8"x6" TEE
1– 30 LF OF 6" DR18 PIPE W/ THRUST BLOCK
(REF DET SHT)

106 LF C900 DR-18 WATERMAIN

"PL" STA 0+41.79–16.89 RT.
PROPOSED SSMH #1
48"ø TYPE 1
RIM=5163.45
IE IN 8"=5157.00
IE 8" OUT=5169.90
(REF DET SHT)

PROPOSED 45° ELBOW W/ THRUST BLOCKS TYP.

PROPOSED 45° ELBOW W/ THRUST BLOCKS TYP.

EXISTING HYDRANT TO BE REMOVED & RELOCATED TO ONE PROPOSED LOCATIONS

"PL" STA.0+12.04 – 13.65' RT. BEGIN WATERMAIN IMPROVEMENTS

EXISTING SSMH RIM=5162.47 EX. 8" IE=5155.53

EXISTING SSMH RIM=5160.90

"PL" STA 9+76.04

"PL" STA ±11+40.00–3.00 RT.
EXISTING 24" SD STUB
IE(e) 24" OUT=5152.50
BEGIN INSTALLATION ON NEW 24" PIPE, MATCH EX. ELEV.
(REF DET SHT)

EXISTING HYDRANT VERIFY, PROTECT IN PLACE

EX. SEWER MAIN

EX. WATERMAIN

EX. 24" N-12 HDPE SD PIPE

EXISTING SSMH RIM=5158.53 IE IN=5148.94

EXISTING SDMH RIM=5159.23 IE 24"=5153.25

DAISY DRIVE (EXISTING)

LARKSPUR STREET

PRIMROSE LANE

FG: 12+33.60

FG: 0+00.00

EC: 2+43.94

EC: 1+86.94

BC: 3+16.27

BC: 2+56.37

BC: 1+16.24

EC: 0+41.79

BC: 0+12.04

SUMMIT ENGINEERING CORPORATION
1150 LAMOILLE HIGHWAY, ELKO, NV 89801
PHONE:(775) 738-8068 FAX:(775) 747-8559

May 19, 2021

REV.	DATE	DESCRIPTION	BY	APP'D

CIVIL IMPROVEMENTS PLANS FOR
CEDAR ESTATES SUBDIVISION ~ UNIT NO. 3
UTILITY PLAN
ELKO COUNTY
NEVADA

ELKO

DESIGNED BY: CIVIL
CHECKED BY: NIB

SCALE
HORIZ: 1"=40'
VERT: NONE

JOB NO: 81966

PROFESSIONAL ENGINEER STATE OF NEVADA
NITIN I. BHAKTA
Exp. 12-31-22
CIVIL
No. 15494
10-25-21

SHEET U-1 OF 13

L:\Nitin\Dwgs\81966_Cedar Estates_Bailey\CIVIL\81966_CEDAR CREEK ESTATES NITIN.dwg

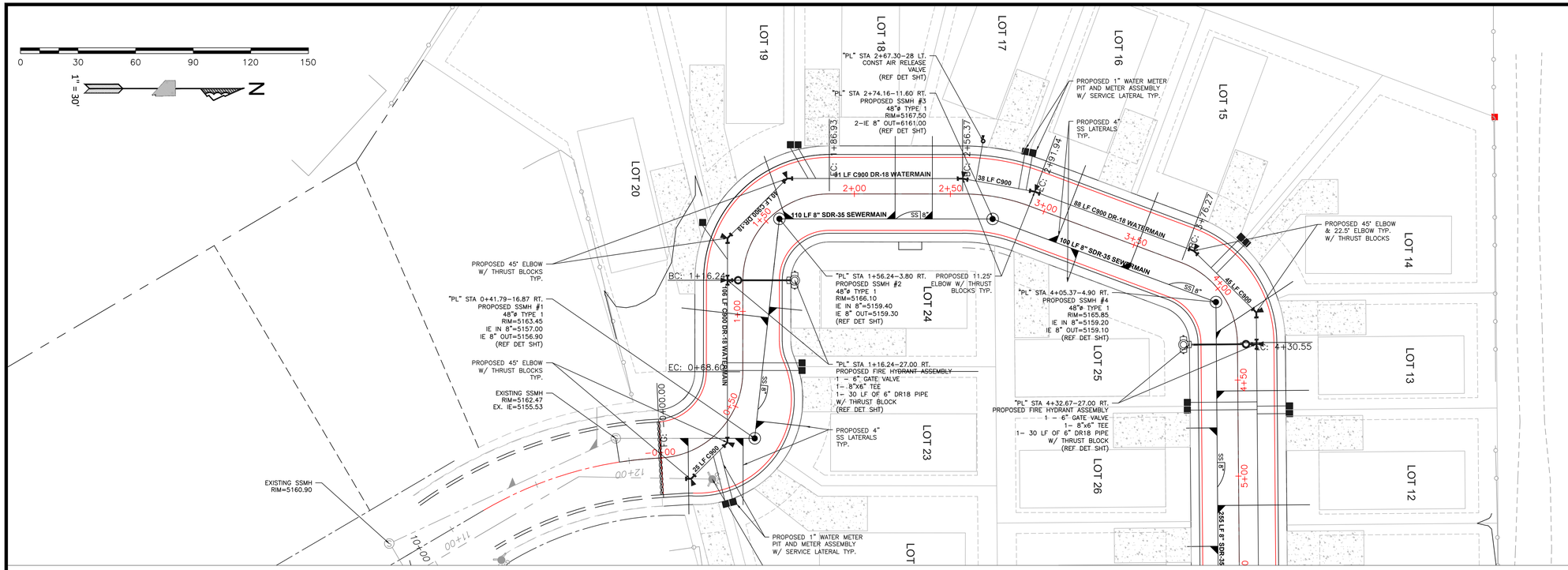

PRIMROSE LANE PROFILE
"PL" STA -0+50.00 ~ 5+00.00

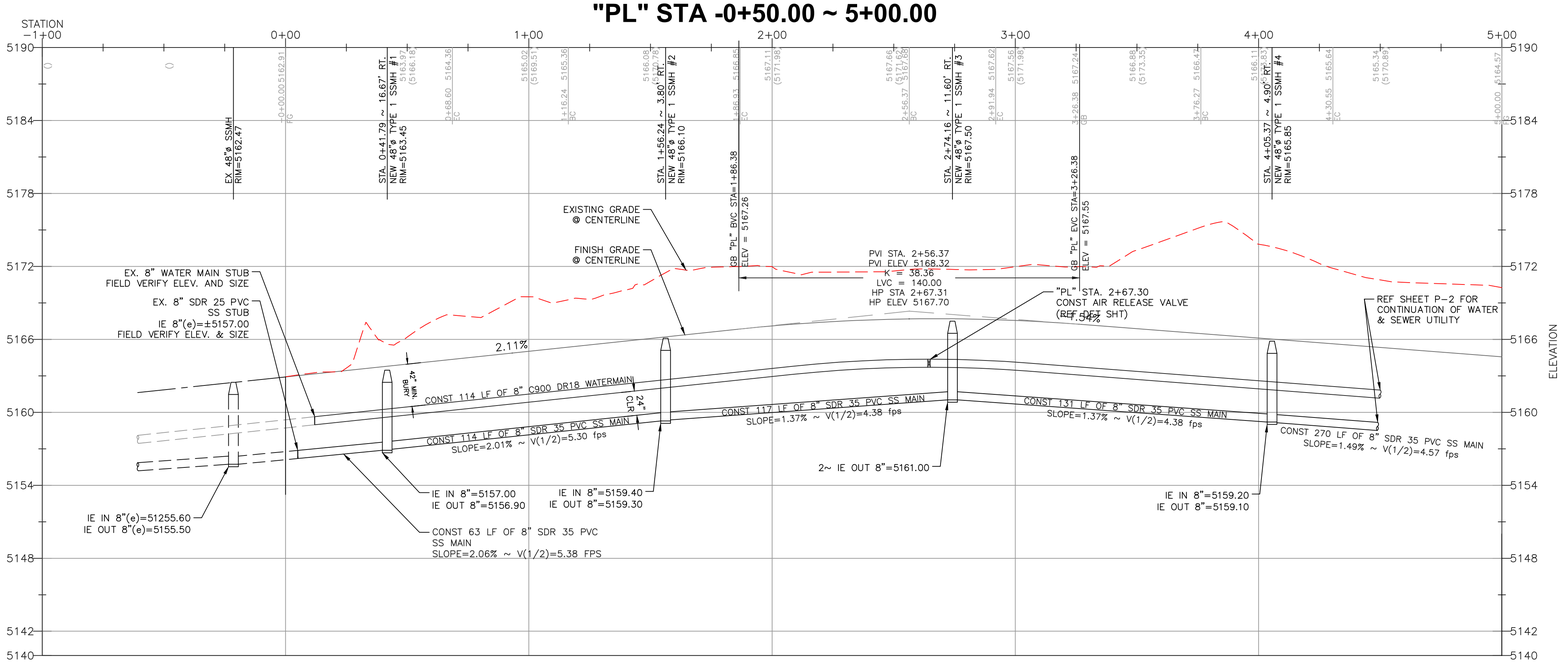

SUMMIT ENGINEERING CORPORATION
1150 LAMOILLE HIGHWAY, ELKO, NV 89801
PHONE:(775) 738-8566 FAX:(775) 747-8559

May 19, 2021

REV.	DATE	DESCRIPTION	BY	APP'D
1	5-28-21	CITY COMMENTS REVISIONS	NIB	NIB

CIVIL IMPROVEMENT PLANS FOR CEDAR ESTATES SUBDIVISIION ~ UNIT NO. 3
PLAN & PROFILE ~ PRIMROSE LANE

ELKO COUNTY NEVADA

ELKO

DESIGNED BY: CIVIL
CHECKED BY: NIB

SCALE
HORIZ: 1"=40'
VERT: NONE

JOB NO: 81966

NITIN I. BHAKTA
Exp. 12-31-22
CIVIL
No. 15494
STATE OF NEVADA
PROFESSIONAL ENGINEER
10-25-21

SHEET P-1 OF 13

L:\Ndrive\Dwgs\81966_Cedar Estates_Bailey\CIVIL\81966_CEDAR CREEK ESTATES NITIN.dwg

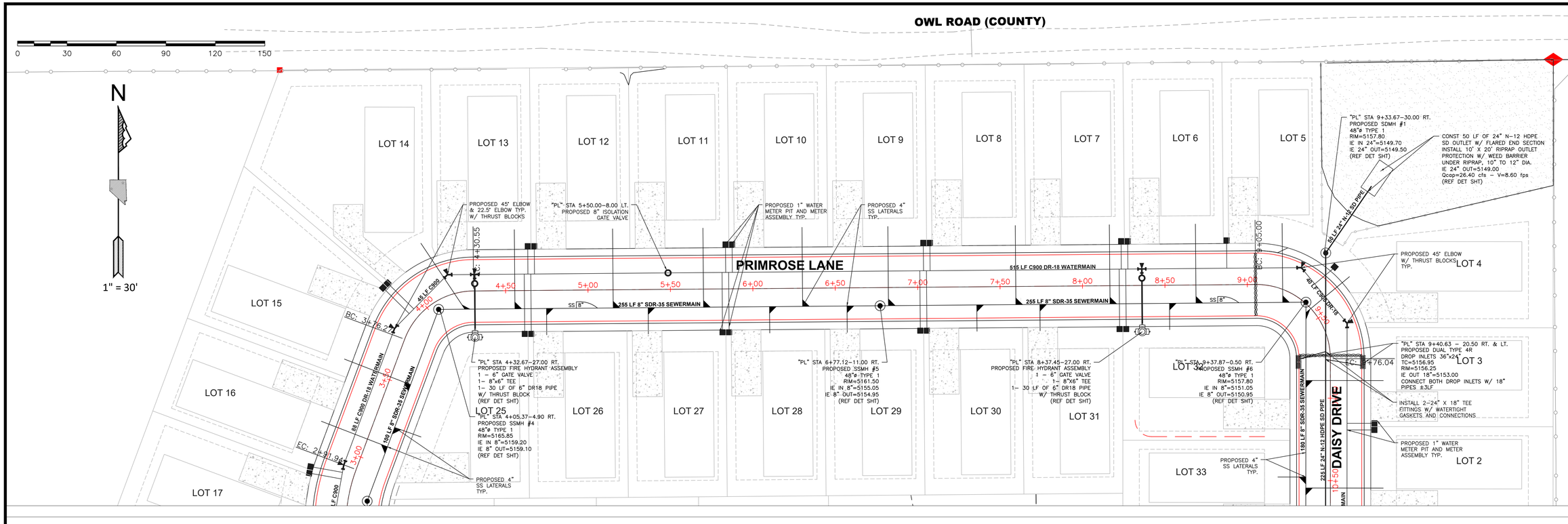

PRIMROSE LANE PROFILE
"PL" STA 4+00.00 ~ 9+50.00

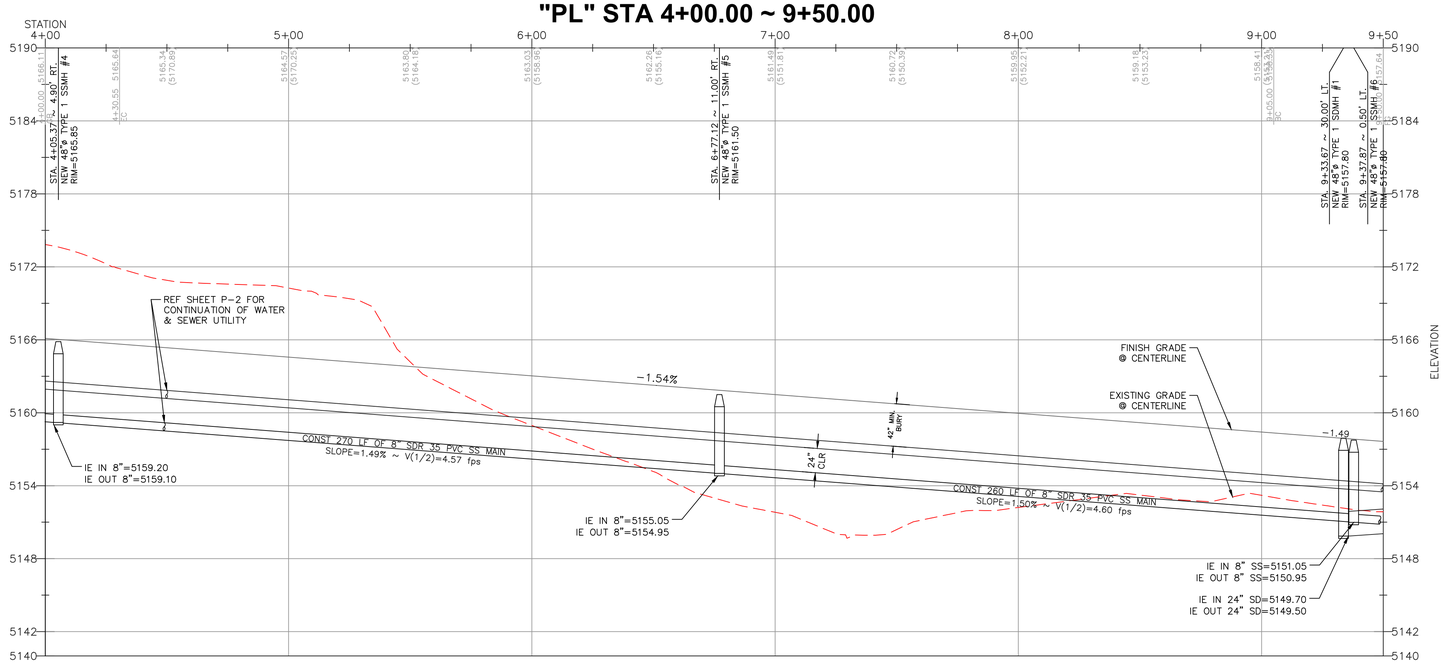

SUMMIT ENGINEERING CORPORATION
1150 LAMOILLE HIGHWAY, ELKO, NV 89801
PHONE:(775) 738-8658 FAX:(775) 747-8559

May 19, 2021

REV.	DATE	DESCRIPTION	BY	APP'D
1	5-28-21	CITY COMMENTS REVISIONS	NIB	NIB

CIVIL IMPROVEMENT PLANS FOR CEDAR ESTATES SUBDIVISIION ~ UNIT NO. 3
PLAN & PROFILE ~ PRIMROSE LANE

ELKO COUNTY NEVADA

ELKO

DESIGNED BY: CIVIL
CHECKED BY: NIB

SCALE
HORIZ: 1"=40'
VERT: NONE

JOB NO: 81966

SHEET P-2 OF 13

L:\Ndrive\Dwgs\81966_Cedar Estates_Bailey\CIVIL\81966_CEDAR CREEK ESTATES NITIN.dwg

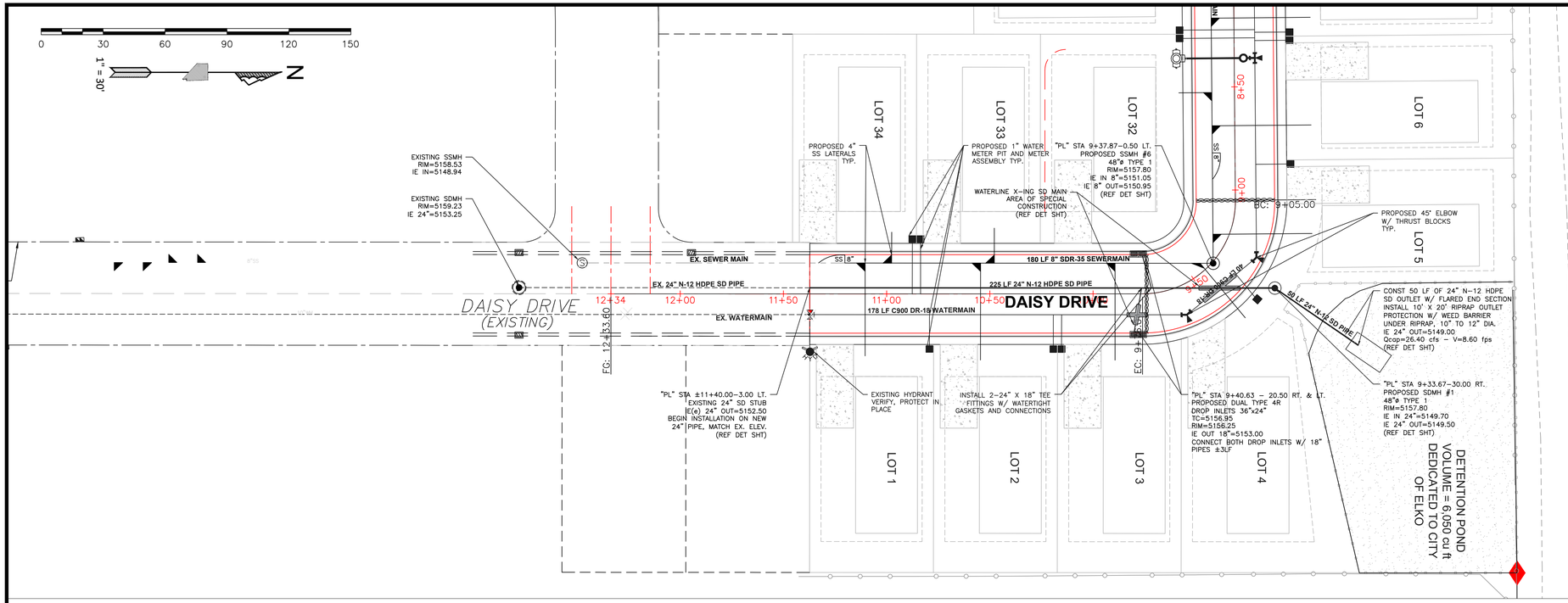

DAISY DRIVE PROFILE
"PL" STA 9+00.00 ~ 13+00.00

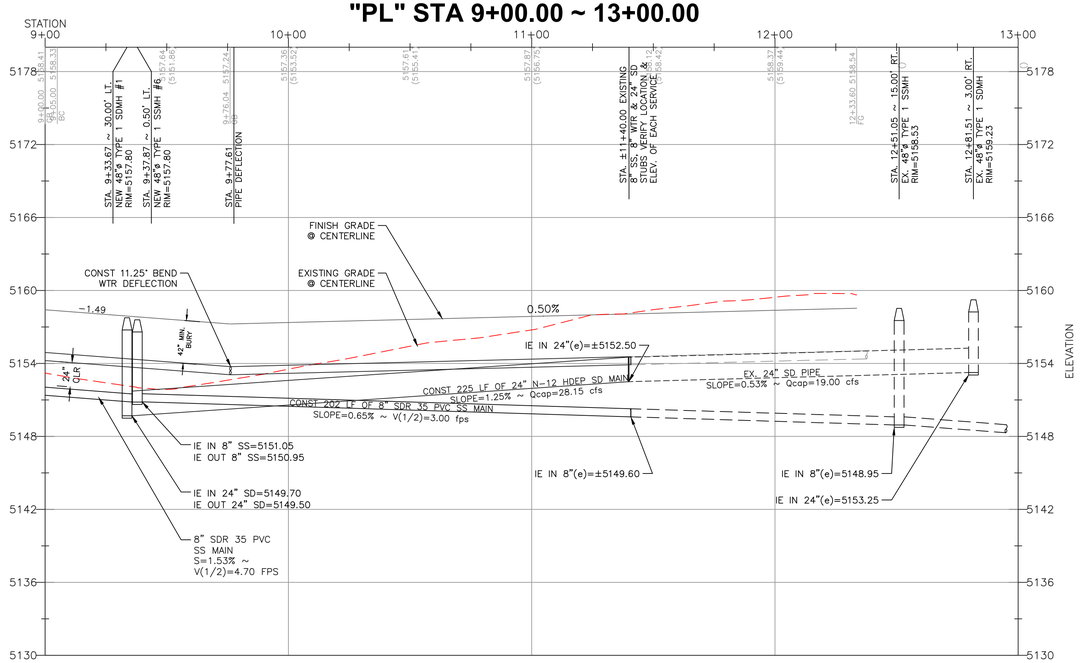

SUMMIT ENGINEERING CORPORATION
1150 LAMOILLE HIGHWAY, ELKO, NV 89801
PHONE:(775) 738-8658 FAX:(775) 747-8559

May 19, 2021

REV.	DATE	DESCRIPTION	BY	APP'D
1	5-28-21	CITY COMMENTS REVISIONS	NIB	NIB

CIVIL IMPROVEMENT PLANS FOR
CEDAR ESTATES SUBDIVISIION ~ UNIT NO. 3
PLAN & PROFILE ~ DAISY DRIVE
ELKO COUNTY NEVADA
ELKO

DESIGNED BY: CIVIL
CHECKED BY: NIB
SCALE
HORIZ: 1"=40'
VERT: NONE
JOB NO: 81966

PROFESSIONAL ENGINEER STATE OF NEVADA
NITIN I. BHAKTA
Exp. 12-31-22
CIVIL
No. 15494
10-25-21

SHEET P-3 OF 13

L:\Nitin\Dwgs\81966_Cedar Estates_Bailey\CIVIL\81966_CEDAR CREEK ESTATES NITIN.dwg

N

1" = 30'

OWL ROAD (COUNTY)

PRIMROSE LANE

DAISY DRIVE

LARKSPUR STREET

DAISY DRIVE (EXISTING)

Street Sign to be added to intersection

"PL" STA. 3+32.67 ~ EC
"PL" STA. 3+78.40 ~ BC
CONST STREET MONUMENT
(REF DET SHT)

CONST 3" AC ON 9" OF TYPE 2 BASE COMPACTED PG-64 ~ 44,100 I SF.
(REF DET SHT)

CONST 4' WIDE PCC SIDEWALK
(REF DET SHT)

CONST 25 MPH SPEED LIMIT SIGNS PER M.U.T.C.D.

CONST 4' TALL CHAIN LINK FENCE AROUND DETENTION POND, COORDINATE TYPE WITH OWNER / CITY OF ELKO

ACCESS AREA OF DETENTION POND TO RECEIVE 6" OF TYPE 2 BASE COMPACTED TO 95% MDD, APPROX 400 SQ. FT.

RN 24" N-12 SD PIPE

CONST 15' WIDE ACCESS GATE FOR UTILITY SERVICE, COORDINATE WITH CITY OF ELKO

EC: 4+30.55

BC: 9+05.00

4+00

4+50

5+00

5+50

6+00

6+50

7+00

7+50

8+00

8+50

9+00

9+50

4.00'
20.50' CL/FFC
38.00' EP/EP
20.50' CL/FFC
4.00'
50.00' ROW

STREET LIGHT TYP.

STREET LIGHT TYP.

STREET LIGHT TYP.

"PL" STA. 9+06.52 ~ BC
"DD" STA. 9+77.61 ~ EC
CONST STREET MONUMENT
(REF DET SHT)

EC: 9+76.04

BC: 3+16.27

3+00

3+50

CONST 4' WIDE PCC SIDEWALK
(REF DET SHT)

EC: 2+91.94

2+00

CONST 25 MPH SPEED LIMIT SIGNS PER M.U.T.C.D.

"PL" STA. 2+91.94 ~ EC
"PL" STA. 2+56.37 ~ BC
CONST STREET MONUMENT
(REF DET SHT)

BC: 2+56.37

2+50

4x12 EASEMENT & CONC. PAD FOR MAIL GANGBOX

PROPOSED MAIL GANGBOX TYP. 3-TOTAL, CONTRACTOR TO LEAVE ROOM ON PAD FOR POST OFFICE TO INSTALL 1 ADDITIONAL PARCEL MAIL BOX, COORDINATE WITH POST OFFICE CONST 12'X4' - 4" THICK CONC. PAD

CONST ROLLED-TYPE CURB ALONG PRIMROSE LANE
(REF DET SHT)

STREET LIGHT TYP.

EC: 1+86.93

2+00

"PL" STA. 1+16.24 ~ EC
"PL" STA. 1+86.93 ~ BC
CONST STREET MONUMENT
(REF DET SHT)

1+50

1+00

0+50

BC: 1+16.24

EC: 0+68.60

FG: -0+00.00

EX. EDGE OF PAVEMENT

STREET LIGHT TYP.

"PL" STA. 0+00.00 ~ EC
"PL" STA. 0+68.60 ~ BC
CONST STREET MONUMENT
(REF DET SHT)

NEATLINE SAWCUT EX. ASPHALT PAVEMENT FOR NEW AC PAVEMENT PLACEMENT MATCH EX. ELEVATIONS

12+00

11+00

10+00

8"-W

CONST ROLLED-TYPE CURB ALONG DAISY DRIVE
(REF DET SHT)

265 LF 24" N-12 HDPE SD PIPE

10.5'
38'
EP/EP
41'
FFC/FFC

CONST 4' WIDE PCC SIDEWALK
(REF DET SHT)

11+00

EX. EDGE OF PAVEMENT

11+50

NEATLINE SAWCUT EX. ASPHALT PAVEMENT FOR NEW AC PAVEMENT PLACEMENT MATCH EX. ELEVATIONS

EX. 24" N-12 HDPE SD PIPE

12+00

12+34

FG: 12+33.60

SUMMIT ENGINEERING CORPORATION
1150 LAMOILLE HIGHWAY, ELKO, NV 89801
PHONE:(775) 738-8658 FAX:(775) 747-8559

September 29, 2021

REV.	DATE	DESCRIPTION	BY	APP'D

CIVIL IMPROVEMENTS PLANS FOR CEDAR ESTATES SUBDIVISION ~ UNIT NO. 3

STRIPING & SIGNAGE PLAN

ELKO

ELKO COUNTY

NEVADA

DESIGNED BY: C 3D
CHECKED BY: NIB

SCALE
HORIZ: 1"=40'
VERT: NONE

JOB NO: 81966

SHEET S-1 OF 13

L:\Ndrive\Dwgs\81966_Cedar Estates_Bailey\CIVIL\81966_CEDAR CREEK ESTATES NITIN.dwg

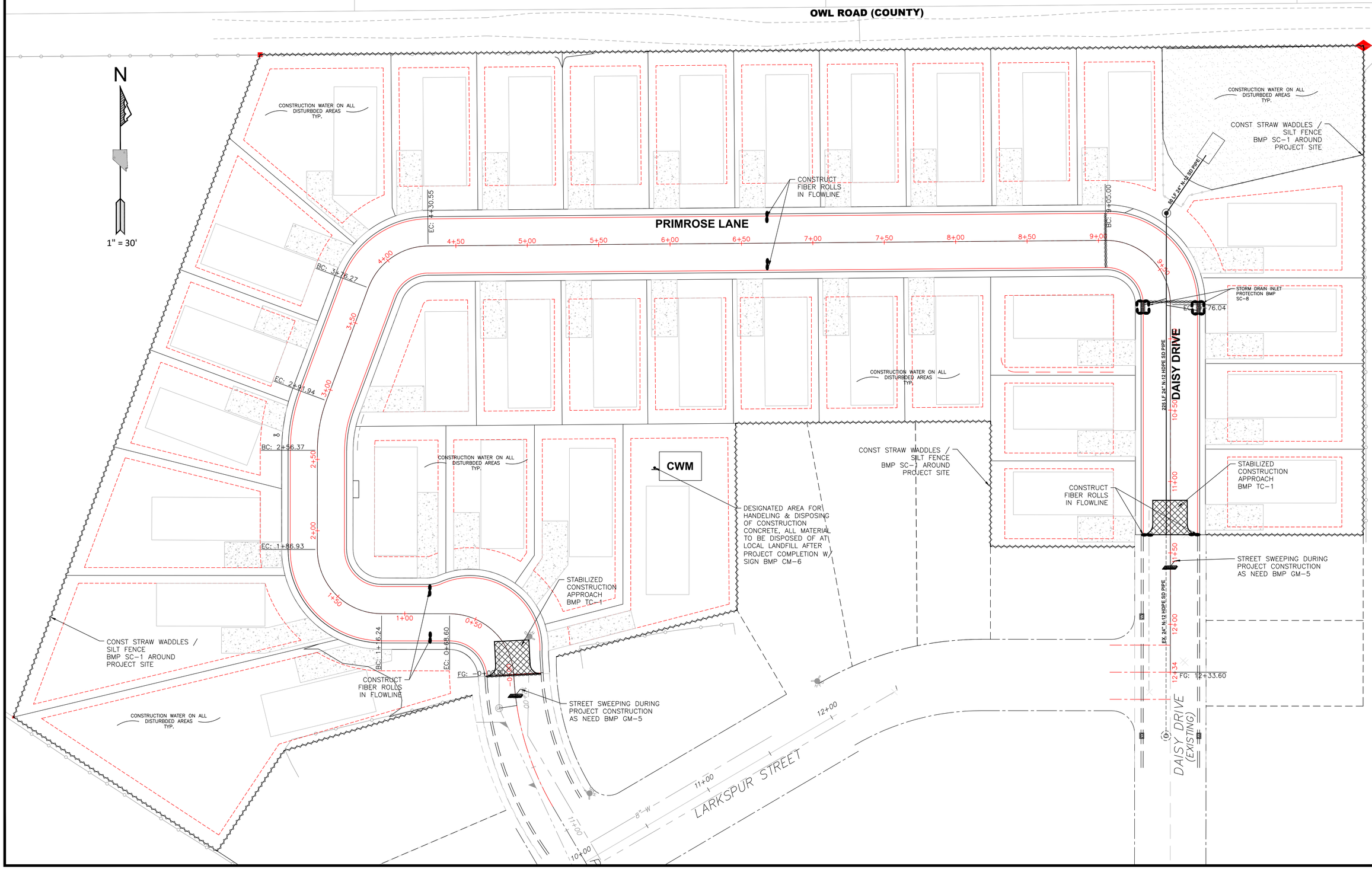

SUMMIT ENGINEERING CORPORATION
1150 LAMOILLE HIGHWAY, ELKO, NV 89801
PHONE:(775) 738-8658 FAX:(775) 747-8559

September 29, 2021

REV.	DATE	DESCRIPTION	BY	APP'D

CIVIL IMPROVEMENTS PLANS FOR CEDAR ESTATES SUBDIVISIION ~ UNIT NO. 3

EROSION CONTROL PLAN

ELKO COUNTY, NEVADA

ELKO

DESIGNED BY: C 3D
CHECKED BY: NIB
SCALE
HORIZ: 1"=40'
VERT: NONE
JOB NO: 81966

SHEET E-1 OF 13

L:\Nitin\Dwgs\81966_Cedar Estates_Bailey\CIVIL\81966_CEDAR CREEK ESTATES NITIN.dwg

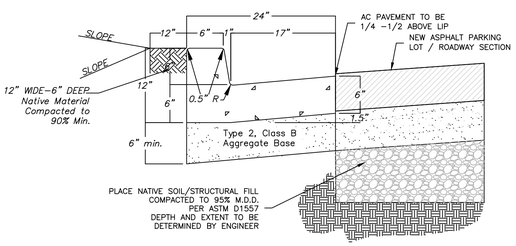

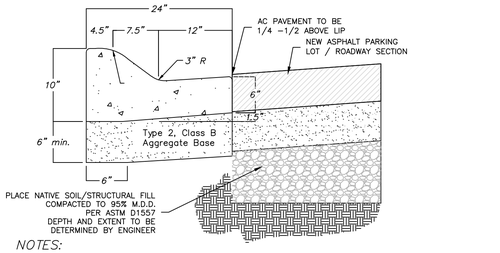

NOTES:

1. CONCRETE SHALL MEET THE REQUIREMENTS OF SECTION 337.10 OF THE LATEST EDITION OF THE STANDARD SPECIFICATIONS FOR PUBLIC WORKS CONSTRUCTION.
2. AGGREGATE BASE MATERIAL SHALL MEET THE REQUIREMENTS OF SECTIONS 302 & 308 OF THE LATEST EDITION OF THE STANDARD SPECIFICATIONS FOR PUBLIC WORKS CONSTRUCTION.
3. ALL CONRETE CURB AND GUTTER SHALL HAVE ½" EXPANSION JOINTS EVERY 90 FEET AND AT ALL CURB RETURNS. WEAKENED PLANE JOINTS SHALL BE EVERY 10 FEET.
4. PLANTMIX BITUMINOUS SURFACE SHALL BE ¼" TO ½" ABOVE LIP OF GUTTER PAN.

1 CURB & GUTTER DETAIL
NOT TO SCALE

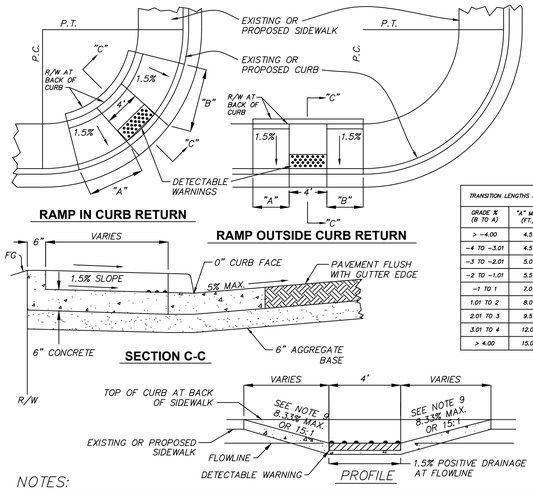

TRANSITION LENGTHS FOR 8.33% SLOPE		
GRADE 'A' (B TO A)	"A" MIN. (FT.)	"B" MIN. (FT.)
> –4.00	4.5	15.0
–4 TO –3.01	4.5	12.0
–3 TO –2.01	5.0	9.5
–2 TO –1.01	5.5	8.0
–1 TO 1	7.0	7.0
1.01 TO 2	8.0	5.5
2.01 TO 3	9.5	5.0
3.01 TO 4	12.0	4.5
> 4.00	15.0	4.5

NOTES:

1. CONCRETE SHALL MEET THE REQUIREMENTS OF SECTION 337.10 OF THE LATEST EDITION OF THE STANDARD SPECIFICATIONS FOR PUBLIC WORKS CONSTRUCTION.
2. AGGREGATE BASE MATERIAL SHALL MEET THE REQUIREMENTS OF SECTION 302 & 308 OF THE LATEST EDITION OF THE STANDARD SPECIFICATIONS FOR PUBLIC WORKS CONSTRUCTION.
3. CURB RAMP WITHIN CURB RETURN SHALL BE LOCATED AT THE MIDPOINT OF CURB RETURN.
4. RAMPS SHALL BE CONSTRUCTED WITH A ROUGH BROOM FINISH TRANSVERSE TO THE SLOPE OF THE RAMP.
5. WHEN CONSTRUCTING A RAMP WHERE CURB & GUTTER EXIST, COMPLETELY REMOVE INTERFERING PORTIONS OF EXISTING CURB & GUTTER. LOCATION OF CURB RAMP SHALL BE APPROVED BY THE CITY OF ELKO PRIOR TO INSTALLATION.
6. DETECTABLE WARNINGS SHALL BE YELLOW AND CONSIST OF RAISED TRUNCATED DOMES AND PLACED AT THE BOTTOM PORTION OF THE RAMP.
7. CROSS SLOPE OF SIDEWALK AND RAMP SURFACES SHALL NOT EXCEED 2%
8. CURB RAMPS & DETECTABLE WARNINGS SHALL MEET THE REQUIREMENTS OF 28 CFR PART 36, ADA STANDARDS FOR ACCESSIBLE DESIGN.
9. PER THE PROWAG, SECTION 304.3.2, THE RUNNING SLOPE OF A CURB RAMP SHALL BE 8.33% MAXIMUM, BUT SHALL NOT REQUIRE THE RAMP LENGTH TO EXCEED 15.0 FEET. ON STEEP STREETS OR INTERSECTIONS THE TRANSITION TO FULL HEIGHT CURB MAY HAPPEN IN THE FIRST 15' MINIMUM AND THE RESULTING SLOPE OF THE RAMP IS ALLOWED TO EXCEED 8.33%

2 TYPE I CURB RAMP
NOT TO SCALE

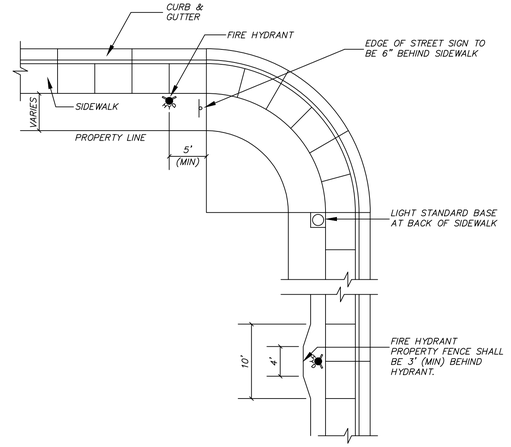

NOTES:

1. WHERE CONDITIONS DIFFER FROM THOSE SHOWN, UTILITIES MAY BE LOCATED WITHIN THE SIDEWALK SECTION WITH THE APPROVAL OF THE GOVERNING AGENCY.
2. WHEN FIRE HYDRANTS AND LIGHT STANDARDS ARE IN THE SAME VICINITY, THEY SHALL BE SEPARATED BY AT LEAST 5 FEET.
3. WHEN STOP SIGN IS LOCATED AT P.C., STREET SIGNS SHALL BE MOUNTED ON SAME POLE.
4. STREET SIGNS AT MID–RETURN SHALL BE LOCATED ADJACENT TO A PEDESTRIAN CURB RAMP, IF APPLICABLE.
5. WHERE CURB AND GUTTER DO NOT EXIST, EDGE OF STOP SIGN SHALL BE PLACED AT THE BEGINNING OF THE CURVE, 6 FEET FROM THE EDGE OF PAVEMENT.

3 STREET LIGHT, HYDRANT, & SIGN LOCATION
NOT TO SCALE

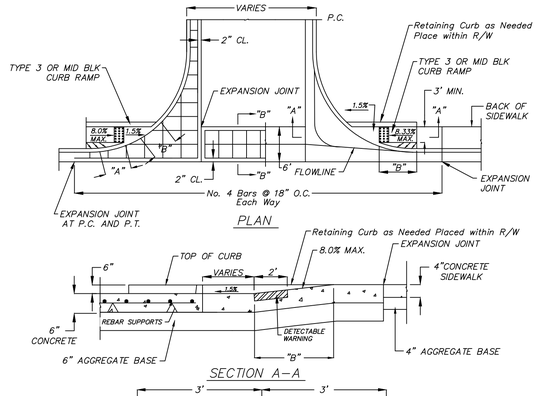

TRANSITION LENGTHS FOR 8.33% SLOPE		
GRADE 'A' (B TO A)	"A" MIN. (FT.)	"B" MIN. (FT.)
> –4.00	4.5	15.0
–4 TO –3.01	4.5	12.0
–3 TO –2.01	5.0	9.5
–2 TO –1.01	5.5	8.0
–1 TO 1	7.0	7.0
1.01 TO 2	8.0	5.5
2.01 TO 3	9.5	5.0
3.01 TO 4	12.0	4.5
> 4.00	15.0	4.5

* SEE NOTES – VALLEY GUTTER WITH APRON

NOTES:

1. CONCRETE SHALL MEET THE REQUIREMENTS OF SECTION 337.10 OF THE LATEST EDITION OF THE STANDARD SPECIFICATIONS FOR PUBLIC WORKS CONSTRUCTION.
2. AGGREGATE BASE MATERIAL SHALL MEET THE REQUIREMENTS OF SECTIONS 302 & 308 OF THE LATEST EDITION OF THE STANDARD SPECIFICATIONS FOR PUBLIC WORKS CONSTRUCTION.
3. REINFORCING STEEL SHALL MEET THE REQUIREMENTS OF SECTION 326 OF THE LATEST EDITION OF THE STANDARD SPECIFICATIONS FOR PUBLIC WORKS CONSTRUCTION.
4. PLANTMIX BITUMINOUS SURFACE SHALL BE ¼" TO ½" ABOVE VALLEY GUTTER. ALL OTHER SURFACES TO BE FLUSH WITH VALLEY GUTTER.
5. IF 2% CROSS SLOPE CAN NOT BE ATTAINED ON THE VALLEY GUTTER, PROPOSED CROSS SLOPE SHALL BE APPROVED BY THE CITY OF ELKO.
6. CURB RAMPS & DETECTABLE WARNINGS SHALL MEET THE REQUIREMENTS OF THE LATEST EDITION OF THE ADAAG.
7. DRIVEWAY GEOMETRICS SHALL GO TO THE P.C. AND THE P.T.
8. MAINTAIN POSITIVE DRAINAGE IN CROSSWALK AREAS AND PEDESTRIAN ROUTES TO PREVENT PONDING.
9. CROSS SLOPE OF SIDEWALK AND CURB RAMP SURFACES SHALL NOT EXCEED 2%
10. WHEN CONSTRUCTING WHERE CURB & GUTTER ALREADY EXIST, COMPLETELY REMOVE INTERFERING PORTIONS OF EXISTING CURB & GUTTER. LOCATION OF CURB RAMP SHALL BE APPROVED BY THE CITY OF ELKO PRIOR TO INSTALLATION.
11. DETECTABLE WARNINGS SHALL BE YELLOW AND CONSIST OF RAISED TRUNCATED DOMES AND PLACED AT THE BOTTOM PORTION OF THE RAMP.
12. CURB RAMPS SHALL BE CONSTRUCTED WITH A ROUGH BROOM FINISH TRANSVERSE TO THE SLOPE OF THE RAMP.
13. PLANTMIX BITUMINOUS SURFACE SHALL BE FLUSH WITH THE EDGE OF THE GUTTER PAN IN THE AREA OF THE CURB RAMP.

4 VALLEY GUTTER W/ APRON DETAIL
NOT TO SCALE

NOTES:

1. WATER DENSIFIED BACKFILL AND TUNNELING SHALL NOT BE ALLOWED.
2. BACKFILL SHALL MEET THE REQUIREMENTS FOR CLASS "E" BACKFILL WITH NO ROCKS SIZED OVER 4", COMPACTED IN 6" (MAX.) LIFTS TO 90% (MIN.) RELATIVE COMPACTION.
3. BEDDING MATERIAL FOR THE FOLLOWING PIPE SHALL MEET THE REQUIREMENTS OF SECTION 200 & 305 OF THE LATEST EDITION OF THE STANDARD SPECIFICATIONS FOR PUBLIC WORKS CONSTRUCTION AND COMPACTED TO A MINIMUM 90% RELATIVE COMPACTION.
   A) DUCTILE IRON PIPE – CLASS "C"
   B) ALL OTHER PIPE – CLASS "A"
4. FOR TRENCHES & EXCAVATIONS LOCATED WITHIN ROADWAY SECTION, SEE PAVEMENT PATCH DETAIL.
5. ALL TRENCHES AND EXCAVATIONS SHALL CONFORM TO THE LATEST EDITION OF O.S.H.A. AND M.U.T.C.D. REQUIREMENTS.
6. NATIVE MATERIAL MUST BE APPROVED BY THE CITY OF ELKO ENGINEER PRIOR TO USING AS BACKFILL OR BEDDING.
7. UNDERGROUND WARNING TAPE SHALL BE METALLIC AND APPROPRIATLY LABELED AND COLORED.

5 TRENCH DETAIL
NOT TO SCALE

6 PRIMROSE LANE & DAISY DRIVE TYPICAL STRUCTURAL SECTION

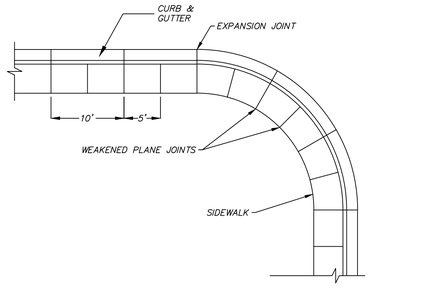

NOTES:

1. CONCRETE SHALL MEET THE REQUIREMENTS OF SECTION 337.10 OF THE LATEST EDITION OF THE STANDARD SPECIFICATIONS FOR PUBLIC WORKS CONSTRUCTION.
2. ALL CONCRETE SIDEWALK SHALL HAVE ½" EXPANSION JOINTS EVERY 30 FEET AND AT ALL CURB RETURNS. WEAKENED PLANE JOINTS SHALL BE EVERY 5 FEET AND COINCIDE WITH THE ADJACENT CURB AND GUTTER WEAKENED PLANE JOINTS. THE WEAKENED PLANE JOINTS PLACED EVERY 5' IN THE SIDEWALK MAY BE SAWCUT WITH CITY OF ELKO APPROVAL AND SHALL MEET THE REQUIREMENTS OF SECTION 314 OF THE LATEST EDITION OF THE STANDARD SPECIFICATIONS FOR PUBLIC WORKS CONSTRUCTION.
3. AGGREGATE BASE MATERIAL SHALL MEET THE REQUIREMENTS OF SECTION 302 & 308 OF THE LATEST EDITION OF THE STANDARD SPECIFICATIONS FOR PUBLIC WORKS CONSTRUCTION.
4. FORESLOPES & BACKSLOPES SHALL BE APPROVED BY THE CITY OF ELKO PRIOR TO CONSTRUCTING.
5. CROSS SLOPE OF SIDEWALK SHALL NOT EXCEED 2%

7 P.C.C. SIDEWALK DETAIL
NOT TO SCALE

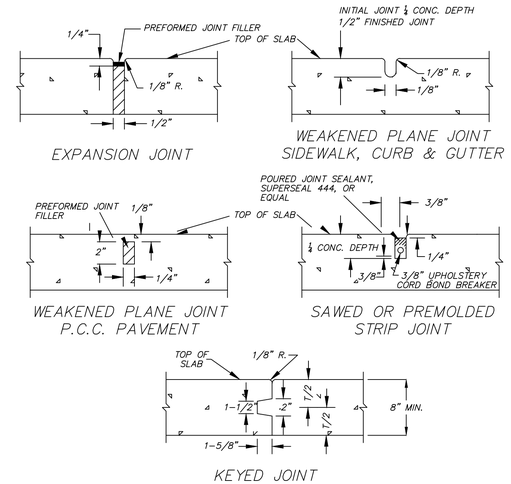

8 P.C.C. JOINT DETAIL

SUMMIT ENGINEERING CORPORATION
1150 LAMOILLE HIGHWAY, ELKO, NV 89801
PHONE:(775) 738-8658 FAX:(775) 747-8559

September 29, 2021

REV.	DATE	DESCRIPTION	BY	APP'D

CIVIL IMPROVEMENTS PLANS FOR
CEDAR ESTATES SUBDIVISION ~ UNIT NO. 3
DETAIL SHEET 1
ELKO COUNTY NEVADA

DESIGNED BY: C 3D
CHECKED BY: NIB
SCALE
HORIZ: 1"=40'
VERT: NONE
JOB NO: 81966

SHEET D-1 OF 13

L:\Ndrive\Dwgs\81966_Cedar Estates_Bailey\CIVIL\81966_CEDAR CREEK ESTATES NITIN.dwg

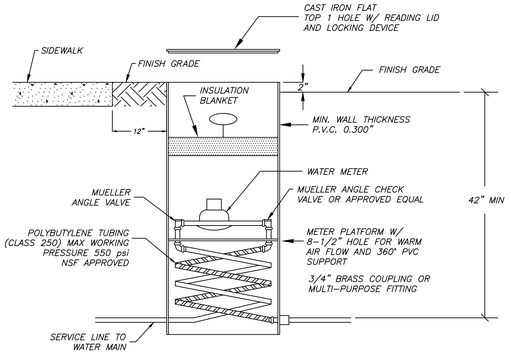

NOTES:

1. 4" WATER METER BOX SHALL BE MUELLER / McCULLOUGH THERMA-COIL METER BOX.
2. NO MORE THAN ONE EXTENSION ALLOWED.
3. LOCATE WATER METER 1 FT. BEHIND BACK OF SIDEWALK.

1 3/4" TO 1" WATER METER
NOT TO SCALE

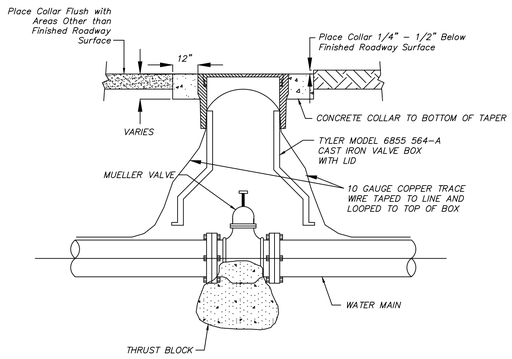

NOTES:

1. CONCRETE SHALL MEET THE REQUIREMENTS OF SECTION 337.10 OF THE LATEST EDITION OF THE STANDARD SPECIFICATIONS FOR PUBLIC WORKS CONSTRUCTION, UNLESS OTHERWISE SPECIFIED.
2. VALVE COLLAR SHALL BE SET ¼" TO ½" BELOW FINISHED CONCRETE OR BITUMINOUS SURFACE. VALVE COLLARS IN ALL OTHER AREAS SHALL BE SET FLUSH WITH FINISHED GRADE, UNLESS OTHERWISE SPECIFIED.
3. CONCRETE COLLAR REQUIRED WHEN VALVE IS NOT LOCATED IN CONCRETE OR BITUMINOUS SURFACE.

2 TYP. VALVE DETAIL
NOT TO SCALE

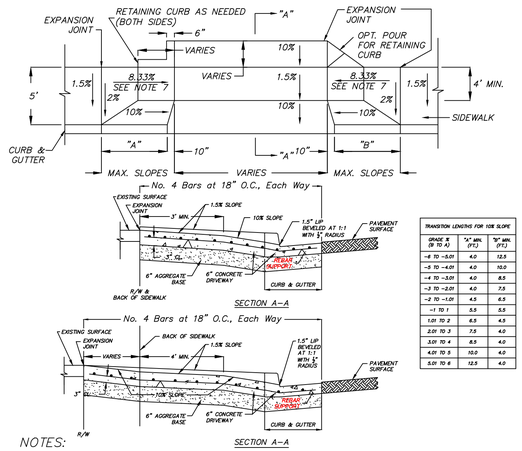

TRANSITION LENGTHS FOR 10E SLOPE		
GRADE 'E' (9 TO 4)	"A" MIN. (FT.)	"B" MIN. (FT.)
-8 TO -5.01	4.0	12.5
-5 TO -4.01	4.0	10.0
-4 TO -3.01	4.0	8.5
-3 TO -2.01	4.0	7.5
-2 TO -1.01	4.5	6.5
-1 TO 1	5.5	5.5
1.01 TO 2	6.5	4.5
2.01 TO 3	7.5	4.0
3.01 TO 4	8.5	4.0
4.01 TO 5	10.0	4.0
5.01 TO 6	12.5	4.0

NOTES:

1. CONCRETE SHALL MEET THE REQUIREMENTS OF SECTION 337.10 OF THE LATEST EDITION OF THE STANDARD SPECIFICATIONS FOR PUBLIC WORKS CONSTRUCTION.
2. AGGREGATE BASE MATERIAL SHALL MEET THE REQUIREMENTS OF SECTION 302 & 308 OF THE LATEST EDITION OF THE STANDARD SPECIFICATIONS FOR PUBLIC WORKS CONSTRUCTION.
3. CONCRETE DRIVEWAY CAN BE POURED MONOLITHICALLY WITH CURB & GUTTER.
4. FOR COMMERCIAL CONCRETE DRIVEWAYS, USE NO. 4 REINFORCING STEEL AT 18" O.C., EACH WAY. RESIDENTIAL CONCRETE DRIVEWAYS DO NOT REQUIRE REINFORCING STEEL. REINFORCING STEEL SHALL MEET THE REQUIREMENTS OF SECTION 326 OF THE LATEST EDITION OF THE STANDARD SPECIFICATIONS FOR PUBLIC WORKS CONSTRUCTION.
5. CROSS SLOPE OF SIDEWALK AND 3 FEET MIN. AREA OF DRIVEWAY SHALL NOT EXCEED 2%.
6. REMOVAL OF EXISTING IMPROVEMENTS SHALL MEET THE REQUIREMENTS OF SECTION 301 OF THE LATEST EDITION OF THE STANDARD SPECIFICATIONS FOR PUBLIC WORKS CONSTRUCTION.
7. PER THE PROWAG, SECTION 304.3.2, THE RUNNING SLOPE OF A CURB RAMP SHALL BE 8.33% MAXIMUM, BUT SHALL NOT REQUIRE THE RAMP LENGTH TO EXCEED 15.0 FEET. ON STEEP STREETS OR INTERSECTIONS THE TRANSITION TO FULL HEIGHT CURB MAY HAPPEN IN THE FIRST 15' MINIMUM AND THE RESULTING SLOPE OF THE RAMP IS ALLOWED TO EXCEED 8.33%

3 PCC DRIVEWAY DETAIL
NOT TO SCALE

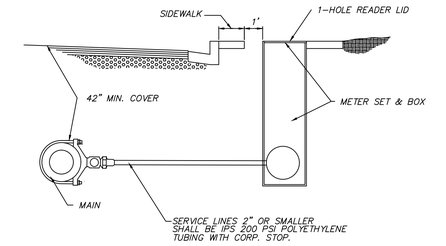

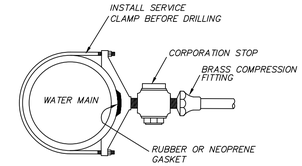

NOTES:

1. CORPORATION STOP, CURB STOP, (GATE VALVE 4" OR LARGER) AND SERVICE LINE TO BE SAME SIZE.
2. SERVICE CLAMPS SHALL BE DOUBLE STRAP FOR ALL SERVICE TAP SIZES, EXCEPT WHERE SIZE OF TAP EXCEEDS MANUFACTURER'S RECOMMENDED LIMIT FOR SIZE OF MAIN.
3. TAPS SHALL BE STAGGERED AND PLACED A MINIMUM OF 12" APART FOR DUCTILE IRON PIPE. TAPS SHALL BE STAGGERED AND PLACED A MINIMUM OF 18" APART FOR C900. NO TAPS SHALL BE CLOSER THAN 2 FEET FROM THE ENDS OF PIPE.
4. ALL JOINT FITTINGS SHALL BE OF BRASS COMPRESSION TYPE.

4 WATER SERVICE CONNECTION
NOT TO SCALE

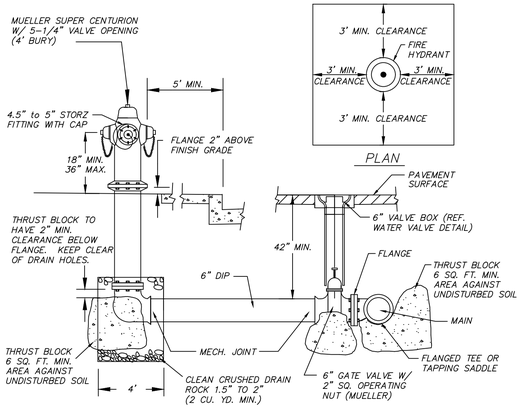

NOTES:

1. HYDRANTS SHALL BE ENAMELED RED.
2. ALL HYDRANTS SHALL HAVE (2) 2.5" PUMPER OUTLETS (MALE THREAD WITH CAP & CHAIN) AND (1) 4.5" STEAMER PUMPER OUTLET WITH 4.5" - 5" STORZ MALE CONNECT WITH CAP & CHAIN. ALL THREADS SHALL BE SPECIFIED FOR AMERICAN NATIONAL HOSE COUPLING.
3. OPERATING NUT SHALL BE 1.5" PENTAGON.
4. INSPECTION BY A CITY OF ELKO FIRE OR PUBLIC WORKS REPRESENTATIVE IS REQUIRED PRIOR TO BACKFILLING.
5. FOR FINAL ACCEPTANCE, A FLOW, FLUSH, & HYDROSTATIC TEST SHALL BE WITNESSED BY CITY OF ELKO FIRE DEPT./UTILITY DIRECTOR OR PUBLIC WORKS REPRESENTATIVE, PER FORM 13-97, "MATERIALS & TEST CERTIFICATE FOR UNDERGROUND PIPING".
6. ALL HYDRANT SHALL INCLUDE APPROVED TRAFFIC PROTECTION, 3' MINIMUM CLEARANCES, AND POSITIVE DRAINAGE AWAY FROM THE HYDRANT.

5 FIRE HYDRANT DETAIL
NOT TO SCALE

THRUST BLOCK BEARING AREA (SQ. FT.)

TYPE OF FITTING		90° BEND	45° BEND	11-1/4° OR 22-1/2° BEND	TEE OR DEAD END	TEE WITH PLUG	CROSS WITH PLUG
SIZE OF PIPE	4"	2	1	1	2	2	2
	6"	4	4	2	4	4	4
	8"	7	4	2	5	7	7
	10"	12	6	3	8	12	12
	12"	16	10	5	12	16	16
	14"	20	12	6	14	20	20
	16"	27	15	8	18	27	27
	18"	45	25	13	32	45	45
	24"	65	35	18	46	65	65

TYPE OF FITTING	90° BEND	45° BEND	11-1/4° OR 22-1/2° BEND	TEE OR DEAD END	CROSS WITH PLUG	TEE WITH PLUG
TYPICAL INSTALLATION	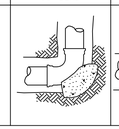	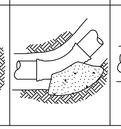	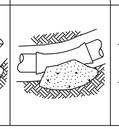	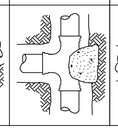	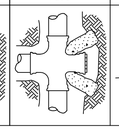	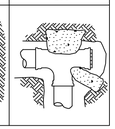

NOTES:

1. THRUST BLOCKS TO BE CONSTRUCTED OF CLASS "C" CONCRETE.
2. AREAS GIVEN ARE FOR CLASS 150 PIPE AT TEST PRESSURES OF 150 P.S.I., WITH 2000 P.S.F. BEARING CAPACITY. INSTALLATIONS USING DIFFERENT PIPE, TEST PRESSURES, AND/OR SOIL TYPES SHOULD ADJUST AREAS ACCORDINGLY, SUBJECT TO APPROVAL OF THE ENGINEER.
3. THRUST BLOCKS TO BE POURED AGAINST UNDISTURBED SOIL. IF SOIL IS DISTURBED IT SHOULD BE RECOMPATED TO 90% COMPACTION PER ASTM D1557.
4. JOINTS AND FACE OF PLUGS TO BE KEPT CLEAR OF CONCRETE.

6 THRUST BLOCK DETAIL
NOT TO SCALE

SALSBURY

18300 Central Avenue
Carson, CA
90746-4008
Phone: (800) 624-5269
Fax: (800) 624-5299

(12) MAILBOXES
(1) OUTGOING MAIL COMPARTMENT
(1) PARCEL LOCKER

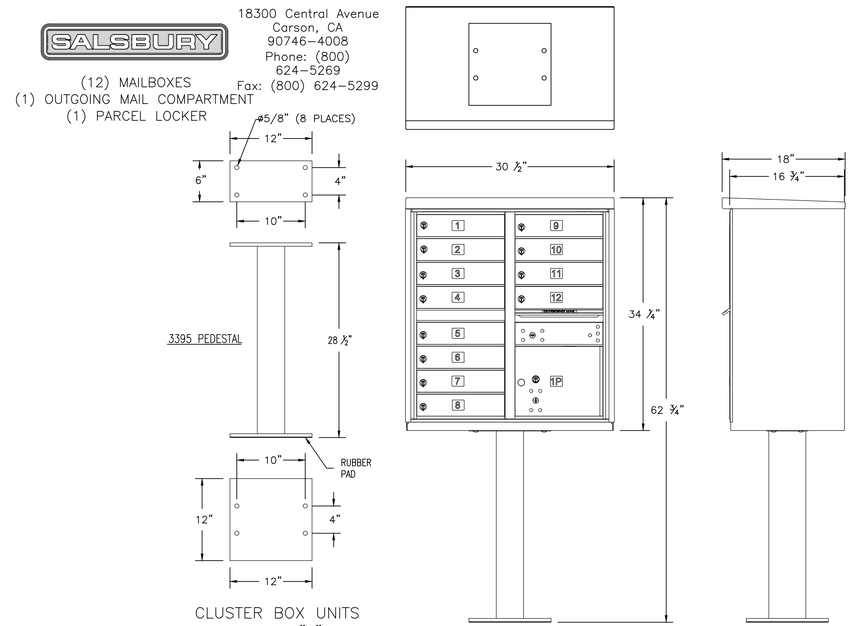

CLUSTER BOX UNITS
3300 SERIES "F" CBUs
AVAILABLE FOR USPS ACCESS OR PRIVATE ACCESS

7 MAIL GANG BOX DETAIL
NOT TO SCALE

SUMMIT ENGINEERING CORPORATION
1150 LAMOILLE HIGHWAY, ELKO, NV 89801
PHONE:(775) 738-8066 FAX:(775) 747-8559

September 29, 2021

REV.	DATE	DESCRIPTION	BY	APP'D

CIVIL IMPROVEMENT PLANS FOR
CEDAR ESTATES SUBDIVISIION ~ UNIT NO. 3
DETAIL SHEET 2
ELKO COUNTY NEVADA
ELKO

DESIGNED BY: C 3D
CHECKED BY: NIB
SCALE
HORIZ: 1"=40'
VERT: NONE
JOB NO: 81966

NITIN I. BHAKTA
STATE OF NEVADA
PROFESSIONAL ENGINEER
No. 15494
Exp. 12-31-22
CIVIL
10-25-21

SHEET D-2 OF 13

L:\Ndrive\Dwgs\81966_Cedar Estates_Bailey\CIVIL\81966_CEDAR CREEK ESTATES NITIN.dwg

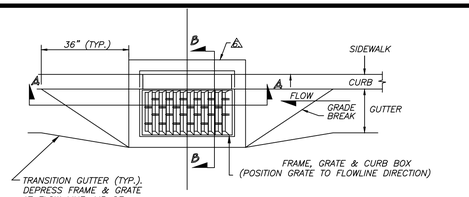

PLAN

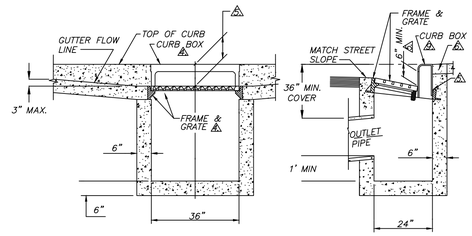

SECTION A-A SECTION B-B

NOTES:

1. FOR ADDITIONAL NOTES, SEE DETAIL SHEET "TYPE 4R DROP INLET – NOTES".

1 TYPE 4R DROP INLET
PRE-CAST ~ NOT TO SCALE

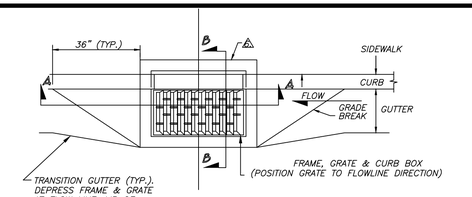

PLAN

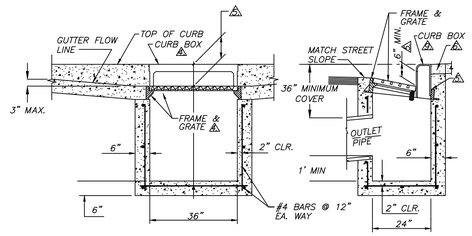

SECTION A-A SECTION B-B

NOTES:

1. FOR ADDITIONAL NOTES, SEE DETAIL SHEET "TYPE 4R DROP INLET – NOTES".

2 TYPE 4R DROP INLET
CAST IN PLACE ~ NOT TO SCALE

NOTES:

1. CONCRETE SHALL MEET THE REQUIREMENTS OF SECTION 337.10 OF THE LATEST EDITION OF THE STANDARD SPECIFICATIONS FOR PUBLIC WORKS CONSTRUCTION.
2. AGGREGATE BASE MATERIAL SHALL MEET THE REQUIREMENTS OF SECTIONS 302, 304 & 308 OF THE LATEST EDITION OF THE STANDARD SPECIFICATIONS FOR PUBLIC WORKS CONSTRUCTION. USE STRUCTURAL BACKFILL FOR BASE BENEATH DROP INLET FLOOR AND BACKFILLING OF DROP INLET AND SHALL BE COMPACTED TO A RELATIVE COMPACTION OF 95%.
3. REINFORCING STEEL SHALL MEET THE REQUIREMENTS OF SECTION 326 OF THE LATEST EDITION OF THE STANDARD SPECIFICATIONS FOR PUBLIC WORKS CONSTRUCTION. REINFORCING STEEL TO HAVE A MINIMUM OF 2 INCH CLEARANCES.
4. FRAME SHALL BE NEENAH R-3294, R-3295 OR R-3067 SINGLE CURB UNIT WITH A TYPE L "VANE GRATE" FOR SINGLE FLOW AND CURB BOX, SOUTH BAY FOUNDRY VANE GRATE SBF 1947 OR APROVED EQUAL, INSTALLED WITH PROPER FLOW DIRECTION OR A TYPE "DL" GRATE FOR DUAL FLOW.
5. TILT FRAME & GRATE AS REQUIRED TO ATTAIN 6" MIN. FLOW OPENING & INSTALL DURABLE SHIMS BETWEEN THE CURB BOX & FRAME AS REQUIRED TO MATCH CURB BOX TO TOP OF CURB AND FACE OF CURB.
6. IF NO SIDEWALK IS PRESENT, POUR 6" CONCRETE CURB STRUCTURE BEHIND GRATE AND TIE BEAM INTO BOX.
7. DROP INLET MAY BE A CAST-IN-PLACE CONCRETE UNIT WITH PRIOR APPROVAL FROM THE CITY OF ELKO.
8. DROP INLET SHALL BE TRAFFIC-RATED & LOCATED AT THE LOW POINTS OR PER APPROVED PLANS.
9. A DECAL, SUPPLIED BY THE CITY OF ELKO, SHALL BE APPLIED TO THE TOP OF THE CURB ADJACENT TO THE DROP INLET WHICH READS "NO DUMPING! DRAINS TO RIVER".
10. INFLOW PIPE INVERT ELEVATION SHALL BE 6 0.1 FEET ABOVE OUTFLOW PIPE INVERT ELEVATION.
11. FRAMES AND GRATES SHALL BE MATCHED TO ACHIEVE A CLOSE TOLERANCE FIT, WITH MINIMAL GAPS, AS APPROVED BY THE CITY OF ELKO.
12. STORM DRAIN PIPE ENTERING OR EXITING DROP INLET SHALL BE HIGH DENSITY POLYETHYLENE PIPE (HDPE) OR REINFORCED CONCRETE PIPE (RCP). USE OF ANY OTHER PIPE WILL REQUIRE PRE-APPROVAL FROM THE CITY OF ELKO. PIPE'S MINIMUM AND MAXIMUM COVER SHALL BE AS PER MANUFACTURER'S RECOMMENDATION.

3 TYPE 4R DROP INLET GEN. NOTES

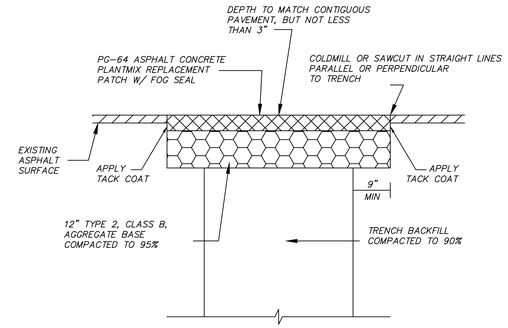

NOTES:

1. IF COLDMILL OR SAWCUT IS WITHIN 24" OF EDGE OF PLANTMIX PAVING, REMOVE EXISTING PAVEMENT TO THAT EDGE AND REPLACE ENTIRE SECTION.
2. USE PG-64 ASPHALT CEMENT IN ALL LIFTS OF TYPE 3 PLANTMIX BITUMINOUS SURFACES.
3. APPLY A SEAL COAT USING SS-1 EMULSIFIED ASPHALT (MIXED WITH AN EQUAL AMOUNT OF WATER). APPLY AT A RATE OF 0.10 GPSY AND APPLY SAND BLOTTER AS NECESSARY.
4. FOR MULTIPLE PLANTMIX BITUMINOUS COURSES, TACK COAT SHALL BE APPLIED BETWEEN EACH PLANTMIX BITUMINOUS COURSE.

4 PAVEMENT PATCH DETAIL
NOT TO SCALE

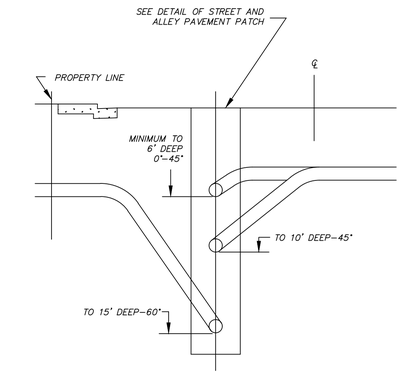

5 SEWER LATERAL CONNECTION ANGLE
NOT TO SCALE

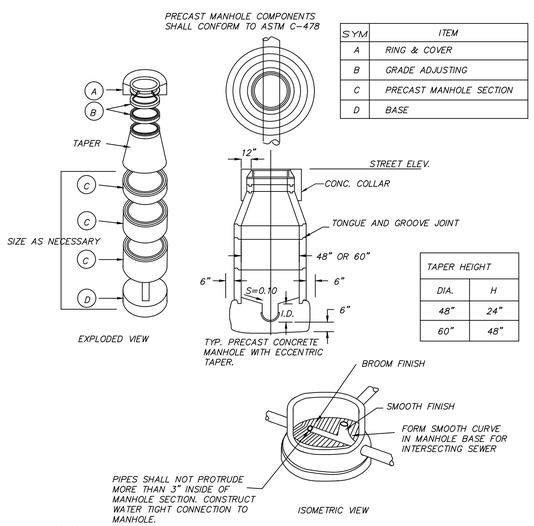

NOTES:

1. PIPE SECTION LENGTHS ARRANGED TO FIT DEPTH.
2. PRECAST BASE MAY BE USED IF APPROVED BY GOVERNING AGENCY.
3. MANHOLE STEPS ARE NOT REQUIRED.
4. REFER TO DETAIL SHEET (MANHOLE – GENERAL NOTES) FOR ADDITIONAL INFORMATION.

5 TYPE 1 48"Ø MANHOLE
NOT TO SCALE

MANHOLES – GENERAL NOTES:

1. ALL MANHOLES SHALL MEET THE REQUIREMENTS OF SECTION 204 OF THE LATEST EDITION OF THE STANDARD SPECIFICATIONS FOR PUBLIC WORKS CONSTRUCTION.
2. MANHOLE COVERS SHALL BE IDENTIFIED AS STORM DRAIN, WATER OR SEWER CLEARLY DISPLAYED ON THE COVER.
3. ALL TRENCHES AND EXCAVATIONS SHALL CONFORM WITH THE LATEST EDITION OF THE O.S.H.A. REQUIREMENTS.
4. PRECAST MANHOLE SECTIONS, OTHER THAN GRADE RINGS, SHALL BE JOINED WITH FLEXIBLE PLASTIC GASKET MATERIAL SUCH AS "RAM-NEK" OR EQUAL AS PER MANUFACTURER'S RECOMMENDATIONS.
5. TYPE & SIZE OF MANHOLE TO BE CONSTRUCTED IN A PARTICULAR LOCATION SHALL BE DETERMINED BY THE PIPE SIZE, ALIGNMENT AND GRADE AS FOLLOWS:

   TYPE 1 & 2

   48" SIZE
   A. ALL CASES FOR PIPE 18" AND SMALLER.
   B. 24" AND SMALLER PIPE ON TANGENT LINE & GRADE.

   60" SIZE
   A. 27" THROUGH 36" PIPE ON TANGENT LINE AND GRADE.
   B. 21" THROUGH 27" PIPE AT ANGLE POINTS AND CHANGES IN GRADE OR PIPE SIZE.

6. EXCAVATABLE SLURRY BACKFILL MAY BE USED AS STRUCTURAL BACKFILL FOR MANHOLES AND MUST MEET THE REQUIREMENTS OF SECTIONS 305.16 & 337.08 OF THE LATEST EDITION OF THE STANDARD SPECIFICATIONS FOR PUBLIC WORKS CONSTRUCTION.
7. THE TOTAL HEIGHT OF MANHOLE GRADE RINGS SHALL NOT EXCEED 12 INCHES.

6 MANHOLE GENERAL NOTES
NOT TO SCALE

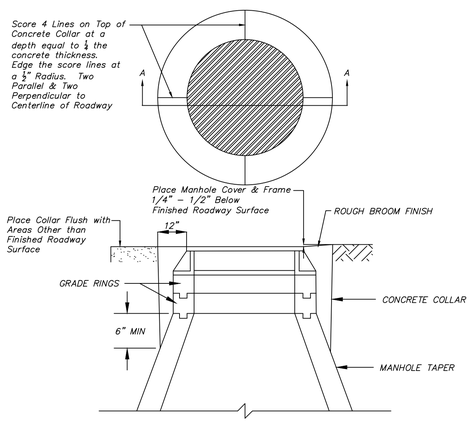

SECTION A-A

NOTES:

1. CONCRETE SHALL MEET THE REQUIREMENTS OF SECTION 337.10 OF THE LATEST EDITION OF THE STANDARD SPECIFICATIONS FOR PUBLIC WORKS CONSTRUCTION.
2. MANHOLE COVER & FRAME SHALL BE SET ¼" TO ½" BELOW FINISHED CONCRETE OR BITUMINOUS SURFACE. MANHOLE COLLARS IN ALL OTHER AREAS SHALL BE SET FLUSH WITH FINISHED GRADE, UNLESS OTHERWISE SPECIFIED.
3. CONCRETE COLLAR IS REQUIRED WHEN MANHOLE IS NOT LOCATED IN CONCRETE OR BITUMINOUS SURFACE.
4. REFER TO DETAIL SHEET (MANHOLE – GENERAL NOTES) FOR ADDITIONAL INFORMATION.

7 MANHOLE COLLAR DETAIL
NOT TO SCALE

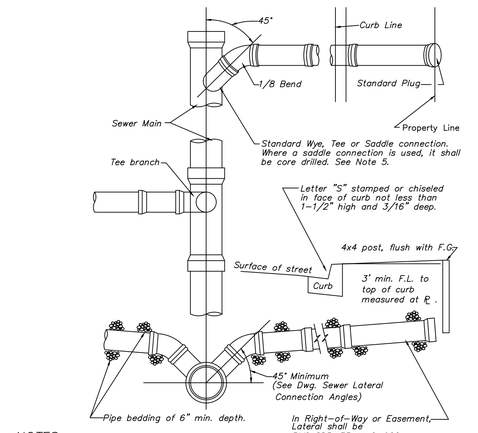

NOTES:

1. IN NO CASE SHALL A LATERAL CONNECT TO THE SEWER MAIN DIRECTLY ON TOP OR MATCH THE FLOWLINE OF THE PIPE.
2. SEWER LATERALS SHALL HAVE A MINIMUM SLOPE OF 2%.
3. ALL JOINTS ON SEWER LATERAL PIPE WITHIN THE RIGHT-OF-WAY SHALL BE COMPRESSION TYPE.
4. LATERAL SHALL EXTEND TO PROPERTY LINE UNLESS OTHERWISE SHOWN ON PLANS.
5. SADDLE CONNECTION SHALL BE PVC SADDLE WITH STAINLESS STEEL STRAPS.
6. ANY ABANDONED SEWER LATERAL IS THE RESPONSIBILITY OF THE CUSTOMER AND SHALL BE CUT AND CAPPED OR PLUGGED WITHIN 6 INCHES OF THE SEWER MAIN AND SUBJECT TO THE CITY OF ELKO'S APPROVAL.
7. SEWER MAIN/LATERAL CONNECTIONS SHALL MEET THE REQUIREMENTS OF NAC 445A.

8 SEWER LATERAL CONNECTION
NOT TO SCALE

SUMMITT ENGINEERING CORPORATION
1150 LAMOILLE HIGHWAY, ELKO, NV. 89801
PHONE:(775) 738-8658 FAX:(775) 747-8559

September 29, 2021

REV.	DATE	DESCRIPTION	BY	APP'D

CIVIL IMPROVEMENTS PLANS FOR CEDAR ESTATES SUBDIVISIION ~ UNIT NO. 3
DETAIL SHEET 3

ELKO COUNTY NEVADA

ELKO

DESIGNED BY:	C 3D
CHECKED BY:	NIB
SCALE	
HORIZ:	1"=40'
VERT:	NONE
JOB NO:	81966

PROFESSIONAL ENGINEER STATE OF NEVADA
NITIN I. BHAKTA
Exp. 12-31-22
CIVIL
No. 15494
10-25-21

SHEET D-3 OF 13

L:\Ndrive\Dwgs\81966_Cedar Estates_Bailey\CIVIL\81966_CEDAR CREEK ESTATES NITIN.dwg

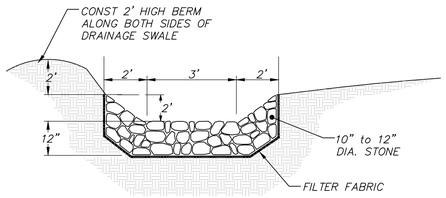

TRAPEZOIDAL
TYPICAL RIP RAP CHANNEL

1 TRAPEZOIDAL DITCH
NOT TO SCALE

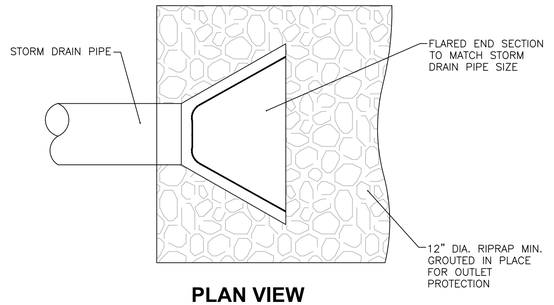

PLAN VIEW
NOT TO SCALE

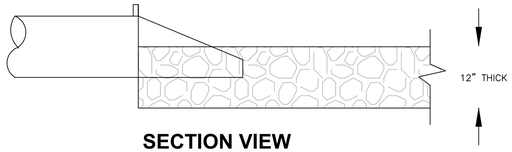

SECTION VIEW
NOT TO SCALE

NOTE
1. ALL MATERIALS SHALL COMPLY WITH THE MOST CURRENT EDITION OF THE STANDARD SPECIFICATIONS FOR PUBLIC WORKS CONSTRUCTION.

2 RIPRAP FLARED END SECTION
NOT TO SCALE

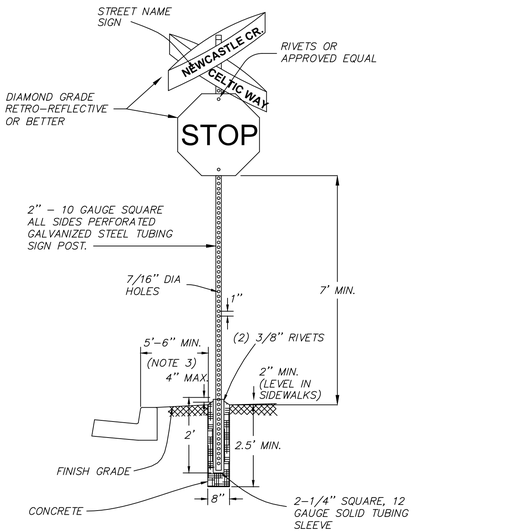

NOTES:

1. *SIGN MATERIALS AND INSTALLATION SHALL BE IN CONFORMANCE WITH THE LATEST EDITION OF THE MANUAL ON UNIFORM TRAFFIC CONTROL DEVICES.*
2. *STREET NAME SIGN SHALL BE AS SPECIFIED BE THE GOVERNING AGENCY AND MOUNTED WITH VANDAL – PROOF HARDWARE.*
3. *ON STREETS WHERE CURBING DOES NOT EXIST, SET EDGE OF SIGN 6' MINIMUM FROM PAVEMENT EDGE.*
4. *EACH STREET SIGN SHALL CONSIST OF TWO PLATES RIVETED TOGETHER.*

3 STOP SIGN MOUNTING DETAIL
NOT TO SCALE

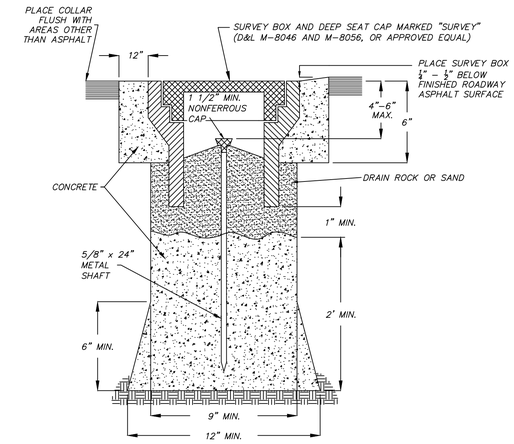

CLASS "A"

NOTES:

1. *FERROUS METAL OVER MONUMENT FOR RECOVERY BY DIP NEEDLE OR MAGNETIC INSERT IN CAP.*
2. *2" MIN. NONFERROUS CAP WITH PROFESSIONAL LAND SURVEYOR NO. PERMANENTLY ATTACHED PRIOR TO PLACEMENT.*
3. *⅝" METALLIC SHAFT (SMOOTH SHAFTS TO BE DEFORMED).*
4. *MONUMENT INSTALLATION SHALL MEET THE REQUIREMENTS OF SECTION 216 & 334 OF THE LATEST EDITION OF THE STANDARD SPECIFICATIONS FOR PUBLIC WORKS CONSTRUCTION.*
5. *SCORE CONCRETE COLLAR AS PER MANHOLE COLLAR AS SHOWN ON DRAWING U-5.1.*

4 STREET MONUMENT DETAIL
NOT TO SCALE

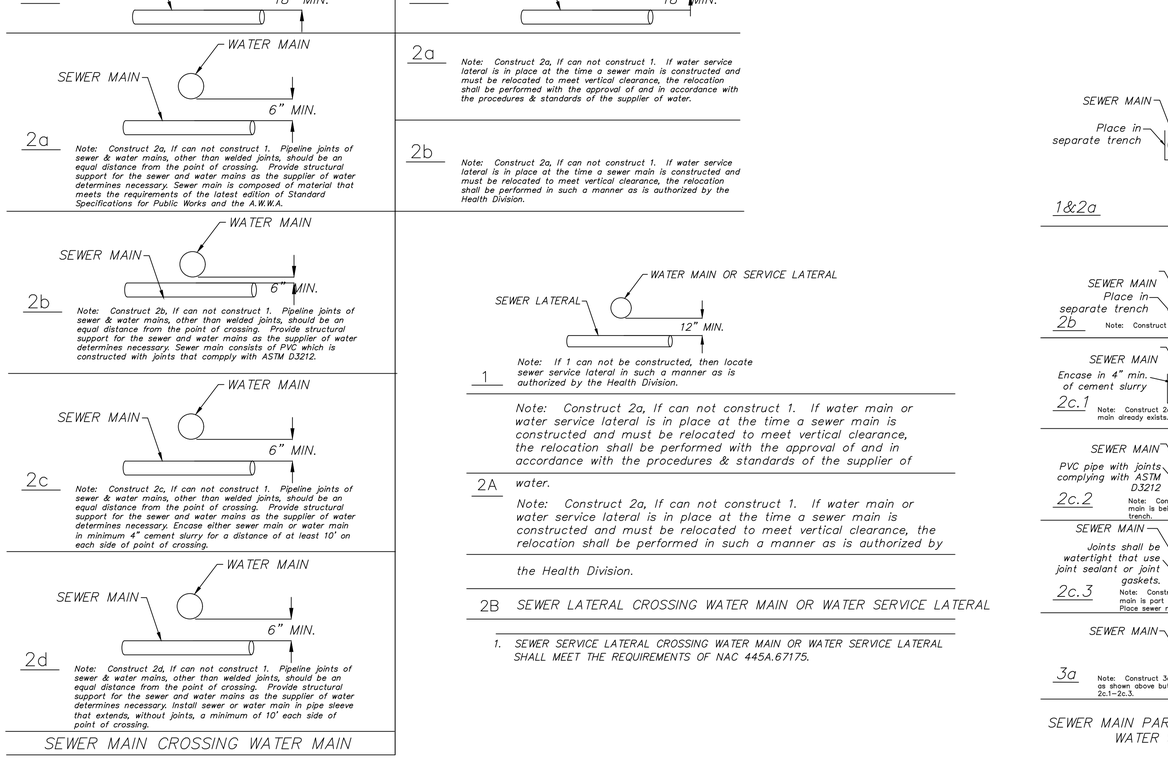

NOTES:

1. *SEWER SERVICE LATERAL CROSSING WATER MAIN OR WATER SERVICE LATERAL SHALL MEET THE REQUIREMENTS OF NAC 445A.67175.*
2. *SEWER MAIN CROSSING WATER MAIN OR WATER SERVICE LATERAL SHALL MEET THE REQUIREMENTS OF NAC 445A.67165 & NAC 445A.6717.*

5 CROSSING LINE SEPERATION
SEWER LATERAL CROSSING WATER/LATERAL

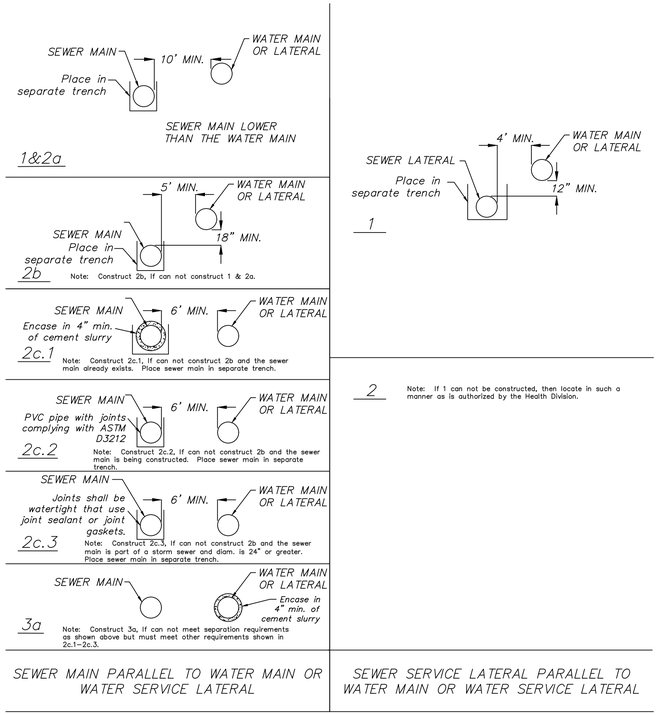

NOTES:

1. *SEWER MAIN/LATERAL PARALLEL TO WATER MAIN OR WATER SERVICE LATERAL SHALL MEET THE REQUIREMENTS OF NAC 445A.67155 & NAC 445A.6716.*

5 PARALLEL LINE SEPERATION

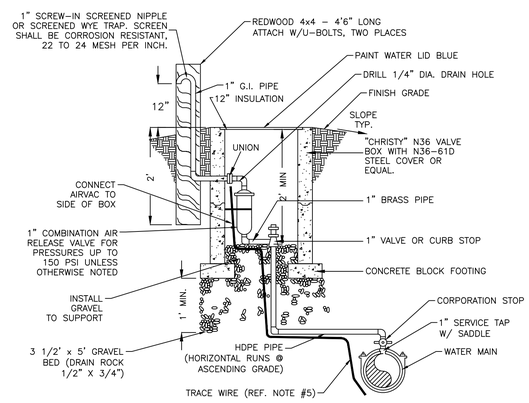

NOTES:

1. COMBINATION AIR RELEASE VALVES SHALL MEET AWWA C512 AND SHALL BE INSTALLED OUTSIDE OF PAVEMENT SECTION. SLOPE GROUND AWAY FROM VALVE BOX OR CONSTRUCT CURBING TO PROTECT FROM FLOORING BY SURFACE WATERS.
2. ALL PIPES SHALL HAVE POSITIVE SLOPE FROM MAIN LINE TO AIR/VACUME VALVE. 30" MINIMUM TO TOP OF PIPE.
3. DESIGN ENGINEER SHALL DETERMINE THE SIZE OF THE COMBINATION AIR RELEASE ASSEMBLY.
4. EXCAVATION & BACKFILL SHALL BE AS SPECIFIED FOR "TRENCH EXCAVATION & BACKFILL" IN DETAIL W-6.
5. LOCATOR WIRE IS TO BE 12 GAUGE COATED COPPER WIRE OR APPROVED EQUAL.
6. EITHER USE 4" DIAMETER STEEL PIPE, FILLED WITH CONCRETE , AND PLACED IN 24" OF CONCRETE, OR USE 4"X4" REDWOOD POST, 4'-6" LONG, ATTACHED VENT PIPE WITH U-BOLTS IN TWO PLACES.
7. LOCATE VAULT OUTSIDE OF ROADWAY.
8. ALL PIPING OUT OF AIR VAC TO BE GALVANIZED.

6 AIR RELEASE VALVE - DETAIL

SUMMIT ENGINEERING CORPORATION
1150 LAMOILLE HIGHWAY, ELKO, NV 89801
PHONE:(775) 738-8598 FAX:(775) 747-8559

September 29, 2021

REV.	DATE	DESCRIPTION	BY	APP'D

CIVIL IMPROVEMENTS PLANS FOR CEDAR ESTATES SUBDIVISIION ~ UNIT NO. 3
DETAIL SHEET 4
ELKO COUNTY NEVADA

ELKO

DESIGNED BY: C 3D
CHECKED BY: NIB
SCALE
HORIZ: 1"=40'
VERT: NONE
JOB NO: 81966

NITIN I. BHAKTA
Exp. 12-31-22
CIVIL
STATE OF NEVADA
No. 15494
10-25-21

SHEET D-4 OF 13

L:\Ndrive\Dwgs\81966_Cedar Estates_Bailey\CIVIL\81966_CEDAR CREEK ESTATES NITIN.dwg

FINAL MAP OF

CEDAR ESTATES SUBDIVISION~ UNIT NO. 3

RYAN G. COOK
EXPIRES 12/31/22
PROFESSIONAL LAND SURVEYOR
STATE OF NEVADA
PRESS No. 15224

10-22-2021

DIVISION OF WATER RESOURCES CERTIFICATE

THIS PLAT IS APPROVED BY THE DIVISION OF WATER RESOURCES OF THE DEPARTMENT OF CONSERVATION AND NATURAL RESOURCES CONCERNING WATER QUANTITY, SUBJECT TO REVIEW OF APPROVAL ON FILE IN THIS OFFICE.

_____ _____
DIVISION OF WATER RESOURCES DATE

NEVADA DIVISION OF ENVIRONMENTAL PROTECTION

THIS FINAL MAP IS APPROVED BY THE DIVISION OF ENVIRONMENTAL PROTECTION OF THE DEPARTMENT OF CONSERVATION AND NATURAL RESOURCES. THIS APPROVAL CONCERNS SEWAGE DISPOSAL, WATER POLLUTION, WATER QUALITY, AND WATER SUPPLY FACILITIES AND IS PREDICATED UPON PLANS FOR A PUBLIC WATER SUPPLY AND A COMMUNITY SYSTEM FOR DISPOSAL OF SEWAGE.

_____ _____
BUREAU OF WATER POLLUTION CONTROL DATE

ELKO CITY COUNCIL CERTIFICATE

AT A REGULAR MEETING OF THE ELKO CITY COUNCIL HELD ON THE _____ DAY OF _____ 20___, THIS MAP WAS APPROVED FOR SUBDIVISION PURPOSES PURSUANT TO N.R.S. 278.461 THROUGH 278.469, INCLUSIVE, AND ALL APPLICABLE LOCAL ORDINANCES. ALL OFFERS OF DEDICATION SHOWN HEREON WERE ACCEPTED FOR PUBLIC USE.

_____ _____
MAYOR, CITY OF ELKO DATE

_____ _____
ATTEST: CLERK, CITY OF ELKO DATE

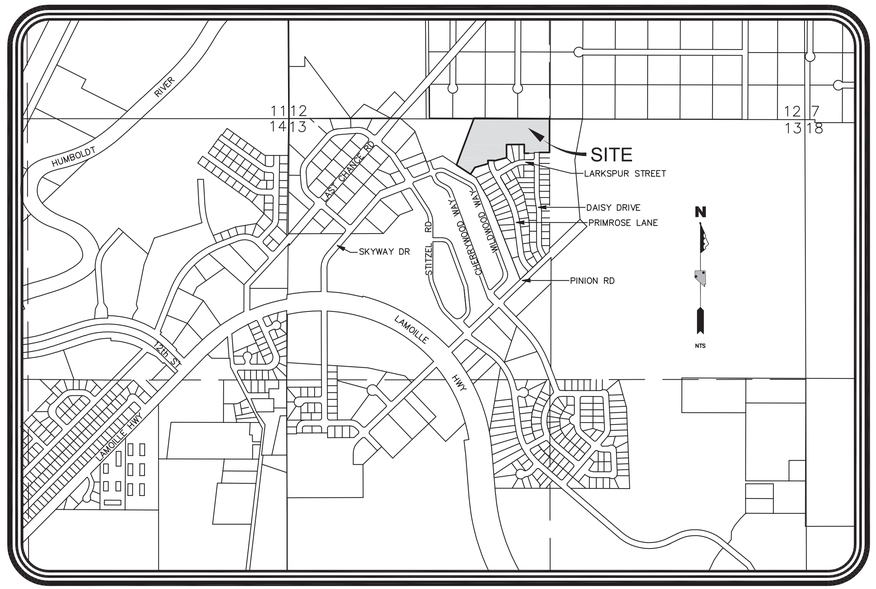

VICINITY MAP

(NOT TO SCALE)

SURVEYOR'S CERTIFICATE

I, RYAN G. COOK, A PROFESSIONAL LAND SURVEYOR LICENSED IN THE STATE OF NEVADA, CERTIFY THAT:

1. THIS IS A TRUE AND ACCURATE REPRESENTATION OF THE LANDS SURVEYED UNDER MY SUPERVISION AT THE INSTANCE OF BAILEY & ASSOCIATES, LLC, A NEVADA LIMITED LIABILITY COMPANY.
2. THE LANDS SURVEYED LIE WITHIN THE NORTHWEST QUARTER OF SECTION 13, TOWNSHIP 34 NORTH, RANGE 55 EAST, M.D.M.
3. THIS PLAT COMPLIES WITH THE APPLICABLE STATE STATUTES AND ANY LOCAL ORDINANCES IN EFFECT ON THE DATE THAT THE GOVERNING BODY GAVE ITS FINAL APPROVAL.
4. THE MONUMENTS DEPICTED ON THE PLAT WILL BE OF THE CHARACTER SHOWN AND OCCUPY THE POSITIONS INDICATED BY _____, 202___ AND APPROPRIATE FINANCIAL GUARANTEE WILL BE POSTED WITH THE GOVERNING BODY BEFORE RECORDATION TO ENSURE THE INSTALLATION OF THE MONUMENTS.

PROFESSIONAL LAND SURVEYOR STATE OF NEVADA RYAN G. COOK EXPIRES 12/31/22 No. 15224

_____ _____
RYAN G. COOK PLS 15224

ELKO CITY PLANNING COMMISSION CERTIFICATE

AT THE REGULAR MEETING OF THE PLANNING COMMISSION OF THE CITY OF ELKO, STATE OF NEVADA, HELD ON THE _____ DAY OF _____, 20___, A TENTATIVE MAP OF THIS SUBDIVISION WAS DULY AND REGULARLY APPROVED PURSUANT TO N.R.S. 278.330 AND THIS FINAL MAP SUBSTANTIALLY COMPLIES WITH SAID TENTATIVE MAP AND ALL CONDITIONS PURSUANT THERETO HAVE BEEN MET.

_____ _____
CHAIRMAN, ELKO CITY PLANNING COMMISSION DATE

REFERENCES

1. THE MAP OF REVERSION BY CEDAR ESTATES, LLC. OF CEDAR ESTATES SUBDIVISION, UNIT NO. 1, LOTS 101–113, 201–214, 315, 402, 403, 501, 502, AND PARCEL A, FILED IN THE OFFICE OF THE ELKO COUNTY RECORDER AS FILE NO. 469127, ON APRIL 23, 2001.
2. THE BOUNDARY LINE ADJUSTMENT RECORD OF SURVEY FOR CEDAR ESTATES, LLC. & MARIA TARABINI, RECORDED IN THE OFFICE OF THE ELKO COUNTY RECORDER AS FILE NO. 548515, ON FEBRUARY 9, 2006.
3. THE PARCEL MAP FOR CEDAR ESTATES, LLC. RECORDED IN THE OFFICE OF THE ELKO COUNTY RECORDER AS FILE NO. 530117, ON JANUARY 28, 2005.
4. THE FINAL MAP OF CEDAR ESTATES SUBDIVISION UNIT NUMBER 1, RECORDED IN THE OFFICE OF THE ELKO COUNTY RECORDER AS FILE NO. 412903, ON AUGUST 27, 1997.
5. THE FINAL MAP OF CEDAR ESTATES SUBDIVISION UNIT NUMBER 2, RECORDED IN THE OFFICE OF THE ELKO COUNTY RECORDER AS FILE NO. 691815, ON OCTOBER 30, 2014.

NOTES

1 – THIS MAP DIVIDES "REMAINDER PARCEL A" AS SHOWN ON THE FINAL MAP OF CEDAR ESTATES SUBDIVISION UNIT NO. 2 FOR BAILEY & ASSOCIATES, LLC, RECORDED IN THE OFFICE OF THE ELKO COUNTY RECORDER AS FILE NO. 691815, ON OCTOBER 30, 2014.

2 – IN ADDITION TO THE EXISTING EASEMENTS AND THE EASEMENTS SHOWN, A 5' WIDE PUBLIC UTILITY AND PRIVATE DRAINAGE EASEMENT WILL BE GRANTED ALONG ALL SIDE AND REAR LOT LINES AND A 7.5' WIDE PUBLIC UTILITY AND PRIVATE DRAINAGE EASEMENT WILL BE GRANTED ALONG ALL PROPOSED STREET RIGHTS–OF–WAY.

3 – PER THE CITY OF ELKO, THE PROPOSED SUBDIVISION COMPLIES WITH ALL OTHER RELEVANT SECTIONS OF CITY CODE WITH THE EXCEPTION OF: a. LOTS 4, 5, 13, 14, 21, 22, 23 AND 25 ARE LOCATED ON CURVED PORTIONS OF THE STREETS AND HAVE SHORT FRONT LOT WIDTHS. A MODIFICATION OF STANDARDS IS REQUIRED TO MAKE THESE LOTS CONFORM.

4 – TOTAL AREAS:
SUBDIVIDED = 7.31 ACRES
LOTS = 6.00 ACRES
RIGHT–OF–WAY = 1.31 ACRES

NV ENERGY CERTIFICATE

A PUBLIC UTILITY EASEMENT IS HEREBY GRANTED TO NV ENERGY WITHIN EACH PARCEL FOR THE EXCLUSIVE PURPOSE OF INSTALLING AND MAINTAINING UTILITY SERVICE FACILITIES TO THAT PARCEL, WITH THE RIGHT TO EXIT THAT PARCEL WITH SAID UTILITY FACILITIES FOR THE PURPOSE OF SERVING ADJACENT PARCELS, AT LOCATIONS MUTUALLY AGREED UPON BY THE OWNER OF RECORD AT THE TIME OF INSTALLATION AND THE UTILITY COMPANY.

_____ _____
SIERRA PACIFIC POWER COMPANY DATE
D.B.A. NV ENERGY

PRINTED NAME_____

SOUTHWEST GAS CERTIFICATE

A PUBLIC UTILITY EASEMENT IS HEREBY GRANTED TO SOUTHWEST GAS WITHIN EACH PARCEL FOR THE EXCLUSIVE PURPOSE OF INSTALLING AND MAINTAINING SERVICE FACILITIES TO THAT PARCEL, WITH THE RIGHT TO EXIT THAT PARCEL WITH SAID UTILITY FACILITIES FOR THE PURPOSE OF SERVING ADJACENT PARCELS.

_____ _____
SOUTHWEST GAS CORPORATION DATE

PRINTED NAME_____

UTILITY COMPANIES CERTIFICATE

THE PUBLIC UTILITY EASEMENTS, ARE APPROVED BY THE RESPECTIVE PUBLIC UTILITIES EXECUTED BELOW.

_____ _____
FRONTIER DATE

_____ _____
ZITO MEDIA DATE

OWNER'S CERTIFICATE

KNOWN OF ALL MEN BY THESE PRESENTS THAT THE UNDERSIGNED, DOUGLAS W. BAILEY, MANAGER OF BAILEY AND ASSOCIATES, A NEVADA LIMITED LIABILITY COMPANY, BEING THE OWNER OF THE PARCELS SHOWN ON THIS MAP, DOES HEREBY CONSENT TO THE PREPARATION AND FILING OF THIS MAP AND OFFER FOR DEDICATION ALL OF THE EASEMENTS AND RIGHT–OF–WAYS FOR PUBLIC ACCESS, UTILITY AND DRAINAGE PURPOSES AS DESIGNATED HEREON. IN WITNESS I, DOUGLAS W. BAILEY, MANAGER OF BAILEY AND ASSOCIATES LLC., SET MY HAND THIS _____ DAY OF _____, 20___.

_____,
DOUGLAS W. BAILEY
MANAGER OF BAILEY AND ASSOCIATES LLC.

STATE OF NEVADA)

) S.S.

COUNTY OF ELKO)

ON THIS _____ DAY OF _____, 20___, PERSONALLY APPEARED BEFORE ME, A NOTARY PUBLIC, DOUGLAS W. BAILEY, PERSONALLY KNOWN (OR PROVED) TO ME TO BE THE PERSON WHOSE NAME IS SUBSCRIBED TO THE ABOVE INSTRUMENT WHO ACKNOWLEDGED THAT HE EXECUTED THE FOREGOING INSTRUMENT.

_____
NOTARY PUBLIC IN AND FOR ELKO COUNTY, NEVADA

(MY COMMISSION EXPIRES:_____)

COUNTY ASSESSOR'S CERTIFICATE

I, JANET IRIBARNE, CERTIFY THAT THE ASSESSOR'S PARCEL NUMBERS SHOWN ON THIS PLAT ARE CORRECT AND THAT THE PROPOSED PARCELS ARE A DIVISION OF ASSESSOR'S PARCEL NO. 001–926–111

_____ _____
JANET IRIBARNE, ELKO COUNTY ASSESSOR DATE

COUNTY TREASURER'S CERTIFICATE

I, CHERYL PAUL, CERTIFY THAT ALL PROPERTY TAXES ON PARCEL NO. 001–926–111 HAVE BEEN PAID FOR THE FISCAL YEAR _____.

_____ _____
CHERYL PAUL, COUNTY TREASURER DATE

CITY ENGINEER'S CERTIFICATE

I, _____, ENGINEER FOR THE CITY OF ELKO, DO HEREBY CERTIFY THAT I HAVE EXAMINED THIS MAP AND FIND IT SUBSTANTIALLY THE SAME AS IT APPEARED ON THE TENTATIVE MAP WITH ALL APPROVED ALTERATIONS AND THAT ALL PROVISIONS OF N.R.S. 278.010 THROUGH 278.630, INCLUSIVE, AND ALL LOCAL ORDINANCES APPLICABLE AT THE TIME OF APPROVAL OF THE TENTATIVE MAP HAVE BEEN COMPLIED WITH, AND THAT I AM SATISFIED THIS MAP IS TECHNICALLY CORRECT AND THAT THE MONUMENTS AS SHOWN ARE OF THE CHARACTER AND OCCUPY THE POSITIONS INDICATED.

_____ _____
ENGINEER FOR THE CITY OF ELKO DATE

FILE No._____
FILED AT THE REQUEST OF
SUMMIT ENGINEERING CORP.
DATE: _____, 2021
TIME: _____ __M.

_____
D. MIKE SMALES
ELKO COUNTY RECORDER

October 11, 2021

FINAL MAP
OF
CEDAR ESTATES SUBDIVISION
UNIT NO. 3
FOR BAILEY & ASSOCIATES, LLC.

SEC 13, T34N, R55E, M.D.B. & M.

ELKO ELKO COUNTY NEVADA

81966_Cedar_Estates_Unit_3.dwg

SUMMIT ENGINEERING CORPORATION
1150 LAMOILLE HWY.
ELKO, NV. 89801
PHONE: (775) 738-8058
FAX: (775) 738-8267
elko@summitnv.com

SHEET 1
OF 2

0 40 80 120 160 200

N

1" = 40'

LAST CHANCE RANCH SUBDIVISION - UNIT NO. 3
NOT A PART
ZONE = AGRICULTURAL / RESIDENTIAL

RODRIGUEZ
LOT 40 MAP 032-000
APN 032-001-040

RODRIGUEZ
LOT 41 MAP 032-000
APN 032-001-041

RODRIGUEZ
LOT 42 MAP 032-000
APN 032-001-042

RODRIGUEZ
LOT 43 MAP 032-000
APN 032-001-043

OWL ROAD (COUNTY)

ELKO COUNTY
ELKO CITY LIMIT

N 89°31'37" E 631.42

FOUND 5/8" REBAR AND CAP – PLS 6203

REMINGTON CONSTRUCTION
APN: 001-920-039
NOT A PART
ZONE = LI

7.5' P.U.E. PER PLAT

LOT 14 [10,946± SF] | LOT 13 [6,629± SF] | LOT 12 [6,599± SF] | LOT 11 [6,599± SF] | LOT 10 [6,599± SF] | LOT 9 [6,599± SF] | LOT 8 [6,599± SF] | LOT 7 [6,599± SF] | LOT 6 [6,599± SF] | LOT 5 [6,666± SF]

CITY OF ELKO
PER MAP 691815
APN: 001-926-110
NOT A PART
ZONE = RMH

N 89°31'37" E 141.26

ELKO COUNTY
ELKO CITY LIMIT

1/4 CORNER
SECTIONS 12 AND 13
FOUND 3 1/2" BRASS CAP
STATE OF NEVADA, DEPARTMENT
OF HIGHWAYS, DATED 1949.

HUMBOLDT READY MIX
FILE NO. 341655
APN: 001-920-020
NOT A PART
ZONE = GI

PRIMROSE LANE

N 89°31'37" E 474.61

OFFERED FOR DEDICATION TO THE CITY OF ELKO
[56,731± SF]

N 89°31'37" E 474.44

LOT 15 [8,270± SF] | LOT 16 [6,181± SF] | LOT 17 [7,320± SF] | LOT 18 [10,369± SF]

LOT 25 [6,061± SF] | LOT 26 [6,061± SF] | LOT 27 [6,061± SF] | LOT 28 [6,061± SF] | LOT 29 [6,061± SF] | LOT 30 [6,061± SF] | LOT 31 [6,061± SF]

LOT 32 [7,107± SF] | LOT 33 [6,060± SF] | LOT 34 [6,060± SF]

LOT 4 [8,959± SF] | LOT 3 [6,624± SF] | LOT 2 [6,605± SF] | LOT 1 [6,602± SF]

DAISY DRIVE

LOT 24 [6,804± SF] | LOT 23 [6,360± SF] | LOT 22 [8,440± SF] | LOT 21 [12,463± SF]

4'x12' USPS GANG BOX EASEMENT GRANTED HEREON

CASTANEDA - SALAS
LOT 16 SUB 548514
APN 001-926-090

ROLF
LOT 17 SUB 548514
APN 001-926-091

CASTRO
LOT 18 SUB 548514
APN 001-926-092

GONZALES
LOT 19 SUB 548514
APN 001-926-093

PAYNTER
LOT 20 SUB 548514
APN 001-926-094

LOT 19 [13,464± SF]

LOT 20 [20,643± SF]

EXISTING 7.5' PUBLIC UTILITY AND DRAINAGE EASEMENT PER FILE NO. 469127

HYDE
LOT 16 SUB 548515
APN 001-926-016

HECKETHORN
LOT 14 SUB 443793
APN 001-926-014

CEDAR ESTATES SUBDIVISION
UNIT NUMBER 1
FILE NO. 412903
NOT A PART
ZONE = RMH

CEDAR ESTATES SUBDIVISION
UNIT NUMBER 2
FILE NO. 691815
NOT A PART
ZONE = RMH

SOUTHGATE MOBILE HOME PARK
FILE NO. 248564
NOT A PART
ZONE = RMH

LARKSPUR STREET

FOUND 5/8 REBAR AND CAP PLS 5072

N 89°57'47" W 60.00

S 84°12'17" W (R)

S 75°32'45" W 130.75

S 73°31'07" W 137.55

N 56°40'28" W 170.96

S 33°31'07" W 64.30

N 89°57'47" W 153.24

S 74°54'18" W (R)

N 89°57'47" W 47.64

N 89°57'47" W 47.98

S 76°32'23" W 233.75

N 69°35'00" W 103.00

N 69°35'00" W 103.38

S 74°02'33" E (R)

N 20°25'00" E 84.33

N 20°25'00" E 84.43

N 20°25'00" E 495.19

N 49°48'20" W 114.39

S 19°27'25" E (R)

S 00°02'13" E 631.56

S 00°02'13" W 266.43

S 00°01'03" E 161.25

S 00°02'13" E 130.69

S 00°02'13" W 76.35

N 89°57'47" W 112.73

N 89°57'47" W 110.11

N 89°57'47" W 110.06

N 89°57'47" W 100.89

N 89°57'47" W 100.95

N 89°57'47" W 160.00

N 89°57'47" W 101.00

S 89°31'37" W 178.58

N 89°31'37" E 474.61

N 89°31'37" E 84.51

N 89°31'37" E 62.00

N 89°31'37" E 62.00

N 89°31'37" E 78.81

S 89°31'37" W 178.58

N 89°31'37" E 474.61

N 89°31'37" E 474.44

N 89°31'37" E 631.42

N 89°31'37" E 141.26

S 00°02'13" E 631.56

S 00°02'13" W 266.43

S 00°02'13" W 76.35

N 74°26'27" E (R)

N 13°34'10" E (R)

N 76°51'10" E 125.82

S 16°27'25" E (R)

S 19°27'25" E (R)

S 17°52'54" E (R)

S 84°12'17" W (R)

S 74°54'18" W (R)

S 33°31'07" W (R)

N 89°57'47" W (R)

S 89°57'47" E (R)

S 00°02'13" W (R)

N 00°02'13" E (R)

S 00°02'13" E (R)

S 00°01'03" E (R)

S 00°02'13" E 69.45

N 00°02'13" E 69.45

N 00°02'13" E 42.51

N 00°02'13" E 36.20

N 00°02'13" E 103.12

N 00°02'13" E 91.31

N 00°02'13" E 126.06

S 00°02'13" E 130.69

S 00°01'03" E 161.20

S 00°01'03" E 161.25

S 00°02'13" E 91.78

S 00°02'13" E 68.89

S 00°02'13" W 101.02

S 00°28'23" E 101.02

S 00°28'23" E 101.98

S 00°28'23" E 101.98

S 00°28'23" E 103.86

S 00°28'23" E 103.98

S 00°28'23" E 103.98

S 00°28'23" E 103.98

Elko City Planning Commission
Agenda Action Sheet

1. **Review, consideration and possible recommendation to City Council for Revocable Permit No. 5-21, filed by Walsh Properties LLC, to occupy a portion of Silver Street right-of-way to accommodate existing off-street parking, landscaping and sign, located generally south of the intersection of Silver Street and 2nd Street, and matters related thereto, FOR POSSIBLE ACTION**

2. Meeting Date: **December 7, 2021**

3. Agenda Category: ***NEW BUSINESS PETITIONS***

4. Time Required: **15 Minutes**

5. Background Information: **The applicant is requesting a change of use for the parcel which will require the property be brought from legal non-conforming to conforming. A revocable license agreement to occupy the right-of-way for the existing parking and sign is required.**

6. Business Impact Statement: **Not Required**

7. Supplemental Agenda Information: **Application and Staff Report**

8. Recommended Motion: **Forward a recommendation to City Council to approve Revocable Permit 5-21 based on the facts and findings presented in Staff Report dated November 19, 2021.**

9. Findings: **See Staff report dated November 19, 2021**

10. Prepared By: **Cathy Laughlin, City Planner**

11. Agenda Distribution: **Walsh Properties LLC**
christinaassu@gmail.com
774 Fir Street
Elko, NV 89801

Lana Carter
lanalcarter@live.com

STAFF COMMENT FLOW SHEET
PLANNING COMMISSION AGENDA DATE: 12/7
Do not use pencil or red pen, they do not reproduce

Title: Revocable Permit No. 5-21

Applicant(s): BARCA, LLC

Site Location: S of intersection of Silver + 2nd Streets

Current Zoning: GI Date Received: 11/15/21 Date Public Notice: N/A

COMMENT: This is to allow the applicant to occupy a portion of the Silver St. ROW with existing off-Street Parking, Landscaping, and a sign.

If additional space is needed please provide a separate memorandum

Assistant City Manager: Date: 11/19/21

Recommend approval as presented by staff

SHW

Initial

City Manager: Date: 11/22/21

No comments/concerns.

CC

Initial

City of Elko
1751 College Avenue
Elko, NV 89801
(775) 777-7160
FAX (775) 777-7119

CITY OF ELKO STAFF REPORT

MEMO DATE: November 19, 2021
PLANNING COMMISSION DATE: December 7, 2021
APPLICATION NUMBER: REV. 5-21
APPLICANT: Walsh Properties, LLC.
OTHER APPLICATIONS: Rezone 2-21

PROJECT DESCRIPTION:
A Revocable Permit to allow for off street parking, a sign and landscaping within the Silver Street public right-of-Way.

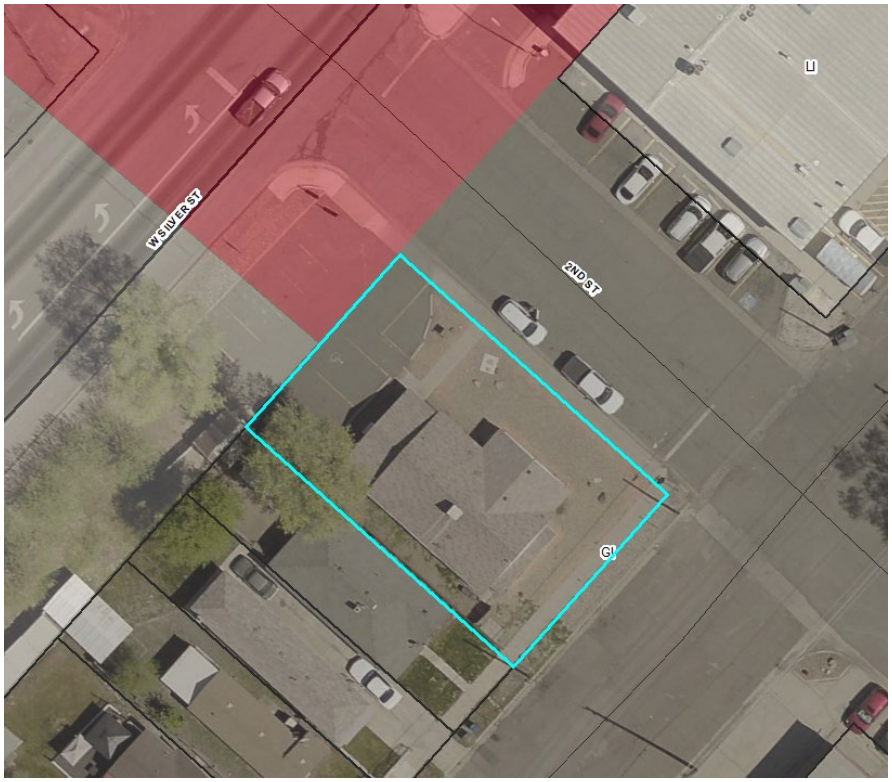

STAFF RECOMMENDATION:

RECOMMEND to APPROVE, subject to findings of fact as stated in this report.

PROJECT INFORMATION

PARCEL NUMBER: 001-335-001

PARCEL SIZE: 6,400 square feet

EXISTING ZONING: (GI) General Industrial

MASTER PLAN DESIGNATION: (MU-DTWN) Mixed Use Downtown

EXISTING LAND USE: Developed, previously a medical office

NEIGHBORHOOD CHARACTERISTICS:

The property is surrounded by:
North: General Commercial (C) / Developed
South: General Industrial (GI) / Developed
West: Light Industrial (LI) / Developed
East: General Industrial (GI) / Developed

PROPERTY CHARACTERISTICS:

The property is generally flat.
The property is located in a flood zone.
The property has Silver Street, River Street and Second Street frontage.
The existing off street parking, developed for a previous use is located in the City of Elko right-of-way, therefore this application has been submitted to bring the property into conformance.

MASTER PLAN AND CITY CODES:

Applicable Master Plans and City Code Sections are:

- City of Elko Master Plan – Land Use Component
- City of Elko Master Plan – Transportation Component
- City of Wellhead Protection Plan
- City of Elko Zoning – Section 3-2-17 Traffic, Access, Parking and Loading Regulations
- City of Elko Zoning – Section 3-8 Flood Plain Management
- City of Elko Zoning – Section 3-9 Sign Regulations

BACKGROUND:

1. Fourteen feet of 2nd Street was vacated to the property.
2. The applicant has applied for a zone amendment to change the use of the building to retail. With that change of use, the property loses its legal non-conforming status.
3. The property has been developed therefore City of Elko utilities have been utilized.
4. Other non-city utilities are located in the immediate area.

MASTER PLAN

Land use:

1. The Master Plan Land Use Atlas shows the area as Downtown Mixed Use.
2. C- General Commercial is a corresponding zoning district for Downtown Mixed Use.
3. Objective 4: Consider a mixed-use pattern of development for the downtown area, and for major centers and corridors, to ensure the area's adaptability, longevity, and overall sustainability.
4. Objective 6: Encourage multiple scales of commercial development to serve the needs of the region, the community, and individual neighborhoods.
5. Objective 8: Encourage new development that does not negatively impact County-wide natural systems, or public/federal lands such as waterways, wetlands, drainages, floodplains etc., or pose a danger to human health and safety.

The proposed revocable permit is in conformance with the Land Use Component of the Master Plan.

Transportation:

1. The area will be accessed from 2nd Street with frontage along Silver Street and River Street.
2. Second Street is classified as a Residential Collector.
3. There is pedestrian access along both Second Street and River Street. Sidewalk along Silver Street will be a condition of the parcel map submittal.

The proposed revocable permit is compatible with the Transportation Component of the Master Plan and is consistent with the existing transportation infrastructure.

ELKO REDEVELOPMENT PLAN:

The property is not located within the redevelopment area.

SECTION 3-2-17 Traffic, Access, Parking and Loading Regulations:

1. The applicant is proposing a change of use on the property from medical office to retail. With that change of use, the property loses its legal non-conforming status and must be brought into conformance.
2. Off street parking is a requirement to be brought into conformance.

The property is required to comply with Section 3-2-17 of city code.

SECTION 3-8 FLOODPLAIN MANAGEMENT

1. This parcel is located in a Special Flood Hazard Area (SFHA), Floodzone AE.

The development will be required to comply with Elko City Code Section 3-8 if there are any significant changes made to the property.

SECTION 3-9 SIGN REGULATIONS

1. No permanent sign or sign foundation shall be placed within any public street right-of-

way without first having obtained approval of a revocable permit to occupy the right-of-way from the City Council, or authorized city personnel.
2. The sign was erected without a revocable permit and is legal non-conforming but the change in use requires that it be brought into conformance with Section 3-9.

With the approval of Rev. 5-21, the existing sign will be in conformance with ECC 3-9.

FINDINGS

1. The proposed revocable permit is in conformance with the Master Plan Land Use Component.

2. The proposed revocable permit is compatible with the Master Plan Transportation Component and is consistent with the existing transportation infrastructure.

3. The property is not located in the Redevelopment Area.

4. The proposed revocable permit brings the property into conformance with Section 3-2-17 for off street parking requirement.

5. The property is located in a Floodzone and therefore compliance with Section 3-8 Floodplain Management is required for any new construction of substantial improvements.

6. The proposed revocable permit brings the property into conformance with Section 3-9 for the existing sign.

STAFF RECOMMENDATION:

Staff recommends this item be **APPROVED**

CITY OF ELKO
Planning Department

Website: www.elkocity.com
Email: planning@elkocitynv.gov

1751 College Avenue · Elko, Nevada 89801 · (775) 777-7160 · Fax (775) 777-7219

November 30, 2021

Walsh Properties, LLC
Attn: Christina Walsh
774 Fir Street
Elko, NV 89801
Christinaassu@gmail.com

Re: Rezone No. 2-21 & Revocable Permit No. 5-21

Dear Applicant/Agent:

Enclosed is a copy of the agenda for an upcoming Planning Commission meeting. Highlighted on the agenda is the item or items that you have requested to be acted on at the meeting. Also enclosed is pertinent information pertaining to your request. Please review this information before the meeting.

The Planning Commission requests that you, or a duly appointed representative, be in attendance at this meeting to address the Planning Commission. If you will not be able to attend the meeting but wish to have a representative present, please submit a letter to the Planning Commission authorizing this person to represent you at the meeting.

To participate in the virtual meeting on a computer, laptop, tablet, or smart phone go to: https://global.gotomeeting.com/join/303168685. You can also dial in using your phone at **+1 (408) 650-3123** The **Access Code** for this meeting is **303-168-685.**

If you have any questions regarding this meeting, the information you received, or if you will not be able to attend this meeting, please call me at your earliest convenience at (775) 777-7160.

Sincerely,

Shelby Knopp

Shelby Knopp
Administrative Assistant

Enclosures

CC: Lana Carter, lanalcarter@live.com

Cathy Laughlin

From: Christina Assu <christinaassu@gmail.com>
Sent: Monday, November 22, 2021 11:34 AM
To: Cathy Laughlin
Subject: Change in named application.

Hi Cathy, as per our conversation. 123 2nd street was purchased as Walsh Properties and I would like the rezone, revocable permit and parcel map applications changed from RARCA Llc to Walsh Properties as the applicant. Thanks and my apologies for my mistake.

Christina Walsh.
Walsh Properties llc

Sent from my iPhone

Doc # 797698
11/19/2021 3:05 PM
Official Record
Requested by
Stewart Title Elko
Elko County - NV
D. Mike Smales - Recorder
Pg 1 of 4 Fee: $37.00
Recorded By: STUTTLE RPTT:$877.50

A.P.N. No.:	001-335-001
R.P.T.T.	$ 877.00
File No.:	1438317
Recording Requested By:	
Stewart Title Company	
Mail Tax Statements To:	*Same as below*
When Recorded Mail To:	
Walsh Properties LLC	
774 Fir Street	
Elko, NV 89801	

UNOFFICIAL COPY

GRANT, BARGAIN, SALE DEED

THIS INDENTURE WITNESSETH: That **Deed E. Harrison, D.C, an unmarried man and Shirleen S. Harrison, D.C., an unmarried woman** for valuable consideration, the receipt of which is hereby acknowledged, does hereby Grant, Bargain, Sell and Convey to **Walsh Properties LLC, a Nevada limited liability company**, all that real property situated in the County of Elko, State of Nevada, bounded and described as follows:

Lots 23 and 24 in Block A of THE CENTRAL ADDITION to the City of Elko, (formerly Town of Elko), County of Elko, State of Nevada, as the same appear upon the Official Map or Plat of said CENTRAL ADDITION to the said City of Elko on file in the office of the County Recorder of the County of Elko, State of Nevada on November 8, 1907 as Document No.3.

Also, a parcel of ground in the SE1/4SE1/4, Section 15, TOWNSHIP 34 NORTH, RANGE 55 EAST, M.D.B.&M., and further described as adjacent to Lot 24, Block A, CENTRAL ADDITION to the City of Elko (formerly Town of Elko) and more particularly described as follows:

Beginning at corner No. 1, which is also the East corner of Lot 24, Block A, CENTRAL ADDITION to the City of Elko, (formerly Town of Aura), according to the Official Map of said CENTRAL ADDITION on file in the office of Recorder of the County of Elko, State of Nevada;
THENCE North 41° 49© East, 14.00 feet to Corner No. 2;
THENCE North 48° 11© West, 100.00 feet to Corner No. 3;
THENCE South 41° 49© West, 14.00 feet to Corner No. 4, which is also the North corner of said Lot 24;
THENCE South 48° 11© East, 100.00 feet to Corner No. 1, the Place of Beginning.

The above metes and bounds legal description appeared previously in that certain Document recorded on January 28, 2009, as Document No. 608829, Official Records, pursuant to NRS Section 6. NRS 111.312.

APN: 001-335-001

(One inch Margin on all sides of Document for Recorder's Use Only)

*SUBJECT TO:
1. Taxes for the fiscal year;
2. Reservations, restrictions, conditions, rights, rights of way and easements, if any of record on said premises.

Together with all and singular the tenements, hereditaments and appurtenances thereunto belonging or in anywise appertaining, and any reversions, remainders, rents, issues or profits thereof.

Dated: 11-15th-2021 DEH

DEH

Deed E. Harrison, D.C

Shirleen S. Harrison, D.C.

UNOFFICIAL COPY

State of Idaho)
) ss
County of Ada)

This instrument was acknowledged before me on the 15th day of November, 2021
By: Deed E. Harrison, D.C

Signature: _____
Notary Public

My Commission Expires: 12/05/2026

LANCE BOETTCHER
COMMISSION NUMBER 64708
NOTARY PUBLIC
State of Idaho
My Commission Expires 12/05/2026

(One inch Margin on all sides of Document for Recorder's Use Only)

*SUBJECT TO:
1. Taxes for the fiscal year;
2. Reservations, restrictions, conditions, rights, rights of way and easements, if any of record on said premises.

Together with all and singular the tenements, hereditaments and appurtenances thereunto belonging or in anywise appertaining, and any reversions, remainders, rents, issues or profits thereof.

Dated: 10-29-21

Deed E. Harrison, D.C

Shirleen S. Harrison, D.C.

UNOFFICIAL COPY

State of _____)
) ss
County of)

This instrument was acknowledged before me on the _____ day of _____, 2021
By: Deed E. Harrison, D.C

Signature: _____
Notary Public

My Commission Expires: _____

(One inch Margin on all sides of Document for Recorder's Use Only)

State of Idaho)
) ss
County of)
Ada

This instrument was acknowledged before me on the 29th day of October, 2021
By: Shirleen S. Harrison, D.C.

Signature: Douha Abdelhussein
Notary Public
My Commission Expires: 4/19/2027

DOUHA ABDELHUSSEIN Comm. No. 20211945 NOTARY PUBLIC Expires: 04/19/2027 STATE OF IDAHO

UNOFFICIAL COPY

(One inch Margin on all sides of Document for Recorder's Use Only)

Doc # DV - 797698
11/19/2021 3:05 PM
Official Record
Requested by
Stewart Title Elko
Elko County - NV
D. Mike Smales - Recorder
Number of pages: 2 Fee: $37.00
Recorded By: STUTTLE RPTT:$877.50

STATE OF NEVADA
DECLARATION OF VALUE FORM

1. Assessor Parcel Number(s)
   a) 001-335-001
   b) _____
   c) _____
   d) _____
2. Type of Property:
   a. ☐ Vacant Land b. ☐ Single Fam. Res.
   c. ☐ Condo/Twnhse d. ☐ 2-4 Plex
   e. ☐ Apt. Bldg. f. ☒ Comm'l/Ind'l
   g. ☐ Agricultural h. ☐ Mobile Home
   ☐ Other _____

FOR RECORDERS OPTIONAL USE ONLY
Book_____ Page:_____
Date of Recording: _____
Notes:

3. a. Total Value/Sales Price of Property $ 225,000.00
   b. Deed in Lieu of Foreclosure Only (value of property) (_____)
   c. Transfer Tax Value: $ 225,000.00
   d. Real Property Transfer Tax Due $ 877.00

4. **If Exemption Claimed**:
   a. Transfer Tax Exemption per NRS 375.090, Section _____
   b. Explain Reason for Exemption: _____

5. Partial Interest: Percentage being transferred: 100%

The undersigned declares and acknowledges, under penalty of perjury, pursuant to NRS 375.060 and NRS 375.110, that the information provided is correct to the best of their information and belief, and can be supported by documentation if called upon to substantiate the information provided herein. Furthermore, the parties agree that disallowance of any claimed exemption, or other determination of additional tax due, may result in a penalty of 10% of the tax due plus interest at 1% per month. Pursuant to NRS 375.030, the Buyer and Seller shall be jointly and severally liable for any additional amount owed.

Signature _____ Capacity Grantor
Deed E. Harrison, D.C.

Signature _____ Capacity Grantee
Walsh Properties LLC

SELLER (GRANTOR) INFORMATION (REQUIRED)
Print Name: Deed E. Harrison, D.C and Shirleen S. Harrison, D.C.
Address: 4941 N. Meandor Place
City: Eagle
State: ID Zip: 83616

BUYER (GRANTEE) INFORMATION (REQUIRED)
Print Name: Walsh Properties LLC
Address: 774 Fir Street
City: Elko
State: NV Zip: 89801

COMPANY/PERSON REQUESTING RECORDING (required if not seller or buyer)
Print Name: Stewart Title Company Escrow # 1438317
Address: 810 Idaho St
City: Elko State: NV Zip: 89801

AS A PUBLIC RECORD THIS FORM MAY BE RECORDED/MICROFILMED

UNOFFICIAL COPY

Doc # DV - 797698
11/19/2021 3:05 PM
Official Record
Requested by
Stewart Title Elko
Elko County - NV
D. Mike Smales - Recorder
Number of pages: 2 Fee: $37.00
Recorded By: STUTTLE RPTT:$877.50

STATE OF NEVADA
DECLARATION OF VALUE FORM

1. Assessor Parcel Number(s)
   a) 001-335-001
   b) _____
   c) _____
   d) _____
2. Type of Property:
   a. ☐ Vacant Land b. ☐ Single Fam. Res.
   c. ☐ Condo/Twnhse d. ☐ 2-4 Plex
   e. ☐ Apt. Bldg. f. ☒ Comm'l/Ind'l
   g. ☐ Agricultural h. ☐ Mobile Home
   ☐ Other _____

FOR RECORDERS OPTIONAL USE ONLY
Book _____ Page: _____
Date of Recording: _____
Notes:

3. a. Total Value/Sales Price of Property $ 225,000.00
   b. Deed in Lieu of Foreclosure Only (value of property) ( )
   c. Transfer Tax Value: $ 225,000.00
   d. Real Property Transfer Tax Due $ 877.00

4. **If Exemption Claimed**:
   a. Transfer Tax Exemption per NRS 375.090, Section _____
   b. Explain Reason for Exemption: _____

5. Partial Interest: Percentage being transferred: 100%

The undersigned declares and acknowledges, under penalty of perjury, pursuant to NRS 375.060 and NRS 375.110, that the information provided is correct to the best of their information and belief, and can be supported by documentation if called upon to substantiate the information provided herein. Furthermore, the parties agree that disallowance of any claimed exemption, or other determination of additional tax due, may result in a penalty of 10% of the tax due plus interest at 1% per month. Pursuant to NRS 375.030, the Buyer and Seller shall be jointly and severally liable for any additional amount owed.

Signature _____ Capacity Grantor
Deed E. Harrison, D.C.
Signature Craig Walsh Capacity Grantee
Walsh Properties LLC

SELLER (GRANTOR) INFORMATION (REQUIRED)
Print Name: Deed E. Harrison, D.C and Shirleen S. Harrison, D.C.
Address: 4941 N. Meandor Place
City: Eagle
State: ID Zip: 83616

BUYER (GRANTEE) INFORMATION (REQUIRED)
Print Name: Walsh Properties LLC
Address: 774 Fir Street
City: Elko
State: NV Zip: 89801

COMPANY/PERSON REQUESTING RECORDING (required if not seller or buyer)
Print Name: Stewart Title Company Escrow # 1438317
Address: 810 Idaho St
City: Elko State: NV Zip: 89801

AS A PUBLIC RECORD THIS FORM MAY BE RECORDED/MICROFILMED

UNOFFICIAL COPY

CITY OF ELKO PLANNING DEPARTMENT
1751 College Avenue * Elko * Nevada * 89801
(775) 777-7160 * (775) 777-7119 fax

APPLICATION FOR REVOCABLE PERMIT TO OCCUPY CITY OF ELKO PROPERTY

APPLICANT(s): RARCA LLC
MAILING ADDRESS: 774 Fir St., Elko NV 89801
PHONE NO (Home) 775-385-4538 (Business) 775-778-0303
NAME OF PROPERTY OWNER (If different): RARCA LLC / Walsh
(Property owner's consent in writing must be provided.)
MAILING ADDRESS: 774 Fir St. Elko, NV 89801
LEGAL DESCRIPTION AND LOCATION OF PROPERTY INVOLVED (Attach if necessary):
ASSESSOR'S PARCEL NO.: 001-335-001
Address 123 2nd street, Elko, NV 89801
APPLICANT'S REPRESENTATIVE OR ENGINEER:

FILING REQUIREMENTS:

Complete Application Form: In order to begin processing the application, an application form must be complete and signed.

Fee: A $400.00 non-refundable filing fee.

Legal Description: A certified metes and bounds legal description of the boundary of the area to be used by the applicant must be provided.

Plot Plan: A plot plan provided by a properly licensed surveyor drawn to scale showing the proposed boundary lines, proposed structures, signs, landscaping, etc.

Note: One .pdf of the entire application must be submitted as well as one set of legible, reproducible plans 8 ½" x 11" in size. If the applicant feels the Commission needs to see 24" x 36" plans, 10 sets of pre-folded plans must be submitted.

Other Information: The applicant is encouraged to submit other information and documentation to support the request.

RECEIVED
NOV 15 2021

Describe the proposed use of the property: The property will be a change of use as it was previously used as a Chiropractic office and will now be converted to a retail establishment selling home goods and furniture. The existing parking and existing sign are located within the City of Elko right-of-way and are legal non-conforming as long as their is no change of use but the proposed use will justify a change in use and therefore the property must be brought up to legal conforming status. There is no other on site parking for the business so the revocable permit will allow us to use and maintain the existing parking and sign for the business.

* I am applying and paying for this permit knowing that the ownership of the property I am requesting to occupy is in question.

(Dimensions) _____ feet X _____ feet (Attach Plot Plan)

(Use additional pages if necessary to address the question)

This area intentionally left blank,

THE APPLICANT HEREBY AGREES TO COMPLY WITH THE FOLLOWING:

1. That if this permit is granted, the applicant agrees that the property involved shall be subject to any utility easements affecting said area, including all existing utility mains, pipelines, laterals, sewer lines, water lines, gas lines, telephone lines, cables, television cables, electrical lines and wires, gas wires, drains and other pipes, wires and cables, and lines now located on, over, under or within said property area, strip or any portion thereof.

2. That if this permit is granted, the applicant hereby agrees that their use of said area shall be only for landscaping, driveways, fences, carports, signs, and any other such similar uses involving non-permanent structures.

3. That the applicant understands and agrees that said permit, if granted, is revocable by the City of Elko, should the City of Elko determine said right-of-way is needed for public use. Revocation of the permit to occupy the right-of-way shall be 30 days from the date of certified mailing to the permit holder, notifying permittee of the City's intent to revoke.

4. That the applicant hereby agrees that the removal and/or relocation of the permittee's improvements, desired to be retained and salvaged by the permittee, shall be the responsibility of the permittee and at the permittee's expense. Any improvements remaining after the 30 day notification period shall be removed by the City of Elko to accomplish the City's plan for public use of said area.

5. That the applicant further agrees to comply with all applicable codes and ordinances pertaining to the applicant's use of said right-of-way.

Applicant / Agent Christina Walsh.
(Please print or type)

Mailing Address 774 Fir ST.
Street Address or P.O. Box

City, State, Zip Code

Phone Number: 775-385-4536.

Email address: Christinaassu@gmail.com.

SIGNATURE: Walsh

FOR OFFICE USE ONLY

File No.: 5-21 **Date Filed:** 11/15/21 **Fee Paid:** $400 CK# 0115

Shelby Knopp

From: Scott A. Wilkinson
Sent: Monday, November 15, 2021 9:42 AM
To: Cathy Laughlin
Cc: Shelby Knopp
Subject: RE: Permit approval

It looks like Deed Harrison approved the application. Correct?

Scott A. Wilkinson
Assistant City Manager
City of Elko
Telephone: 775.777.7211
Email: sawilkinson@elkocitynv.gov

From: Cathy Laughlin
Sent: Monday, November 15, 2021 8:26 AM
To: Scott A. Wilkinson <sawilkinson@elkocitynv.gov>
Cc: Shelby Knopp <sknopp@elkocitynv.gov>
Subject: FW: Permit approval

Scott,
Walsh properties would like to meet the deadline for the December PC meeting for the rezone, they have also submitted a revocable permit application. They were going to close last week but the seller did not make it back from hunting so they are closing sometime this week. Will this email work for the permission from the owner to allow them to apply even though they will own the property before the PC meeting?

Cathy Laughlin
City Planner

(775)777-7160 ph
(775)777-7219 fax
claughlin@elkocitynv.gov

City of Elko
1751 College Avenue
Elko, NV 89801

From: Christina Assu [mailto:christinaassu@gmail.com]
Sent: Friday, November 12, 2021 6:16 PM
To: Cathy Laughlin <lesaka@frontiernet.net>; Cathy Laughlin <claughlin@elkocitynv.gov>
Subject: Fwd: Permit approval

Sent from my iPhone

Begin forwarded message:

From: dustyshipp@gmail.com
Date: November 12, 2021 at 5:15:42 PM PST
To: Christina Walsh <CHRISTINAWALSH.REALTOR@gmail.com>
Subject: Fwd: Permit approval

Begin forwarded message:

> **From:** "Shirlene Harrison, DC" <shirleneharrison@gmail.com>
> **Date:** November 12, 2021 at 2:58:29 PM PST
> **To:** Deed Harrison <drdeedharrison@gmail.com>
> **Cc:** Harrison Shirleen <drshirlene@idealspine.com>, dustyshipp@gmail.com
> **Subject: Re: Permit approval**
>
> Ok
>
> On Fri, Nov 12, 2021 at 3:50 PM Deed Harrison <drdeedharrison@gmail.com> wrote:
>
> > That's fine by me. Thank you.
> >
> > Deed
> >
> > Sent from my iPhone
> >
> > > On Nov 12, 2021, at 3:47 PM, dustyshipp@gmail.com wrote:
> > >
> > > Good afternoon. The buyer is wanting to submit the application on Monday for permits. There is a deadline for this that needs to be done for them. Because of our extension I would like to make sure that we request your approval in this matter. This has nothing to do with the purchase and no work will commence on the property obviously prior to close but I would like to make sure that you guys are OK that they submit the applications and plans to the city to get the permitting process started.
> > >
> > > Thanks
> > > Dusty Shipp
> > > 775-934-5785
>
> --
> Yours In Health,
>
> ***Shirlene Harrison, DC***
> Ideal Spine Health Center, PLLC
> 950 E Riverside Dr
> Eagle, ID 83616
> 208.939.2502

RECEIVED
NOV 15 2021

EXHIBIT A
AREA FOR REVOCABLE PERMIT TO OCCUPY CITY OF ELKO PROPERTY FOR WALSH RECLAMATION
November 8, 2021

A Parcel of land located in Section 15, Township 34 North, Range 55 East, M.D.B. & M., City of Elko, Nevada, adjacent to Lot 23 and Lot 24, of Block A, Central Addition to the Town now City of Elko, Nevada and that portion of Second Street previously vacated, more particularly described as follows:

Beginning at the most Westerly Corner of said Lot 23, Block A, a point being Corner No. 1, the true point of beginning;

Thence N 48° 02' 29" W, 26.34 feet to Corner No. 2;

Thence N 41° 58' 21" E, 27.91 feet to Corner No. 3;

Thence N 43° 15' 11" E, 27.54 feet to Corner No. 4;

Thence from a tangent bearing N 43° 15' 11" E, on a curve to the right with a radius of 5.00 feet, through a central angle of 45° 38' 48", for an arc length of 3.98 feet to Corner No. 5;

Thence N 88° 53' 59" E, 3.49 feet to Corner No. 6;

Thence from a tangent bearing N 88° 53' 59" E, on a curve to the right with a radius of 5.00 feet, through a central angle of 43° 03' 32", for an arc length of 3.76 feet to Corner No. 7;

Thence S 48° 02' 29" E, 18.16 to Corner No. 6, a point being on the Northwesterly Line of said previously vacated Second Street;

Thence S 41° 57' 31" W, 62.72 feet along the Northwesterly Lines of said Lot 23 and Lot 24, Block A and the Northwesterly Line of that portion of Second Street previously vacated to Corner No. 1, the point of beginning, containing 1,623 square feet, more or less.

Continued on Page 2

Exhibit A
Area of Revocable Permit
to Occupy the City of Elko Property
for Walsh Reclamation
City of Elko, Nevada
Continued from Page 1

The basis of bearing for the above described parcel is the Record of Survey for the City of Elko Railroad Relocation Project on file in the office of the Elko County Recorder, Elko, Nevada, as File No. 237417.

Reference is hereby made to Exhibit B, Map of Area for Revocable Permit to Occupy City of Elko Property for Walsh Reclamation, City of Elko, Nevada, attached hereto and made a part hereof.

PROFESSIONAL LAND SURVEYOR STATE OF NEVADA
ROBERT E. MORLEY
Exp. 12 - 31 - 21
No. 6203

11/9/2021

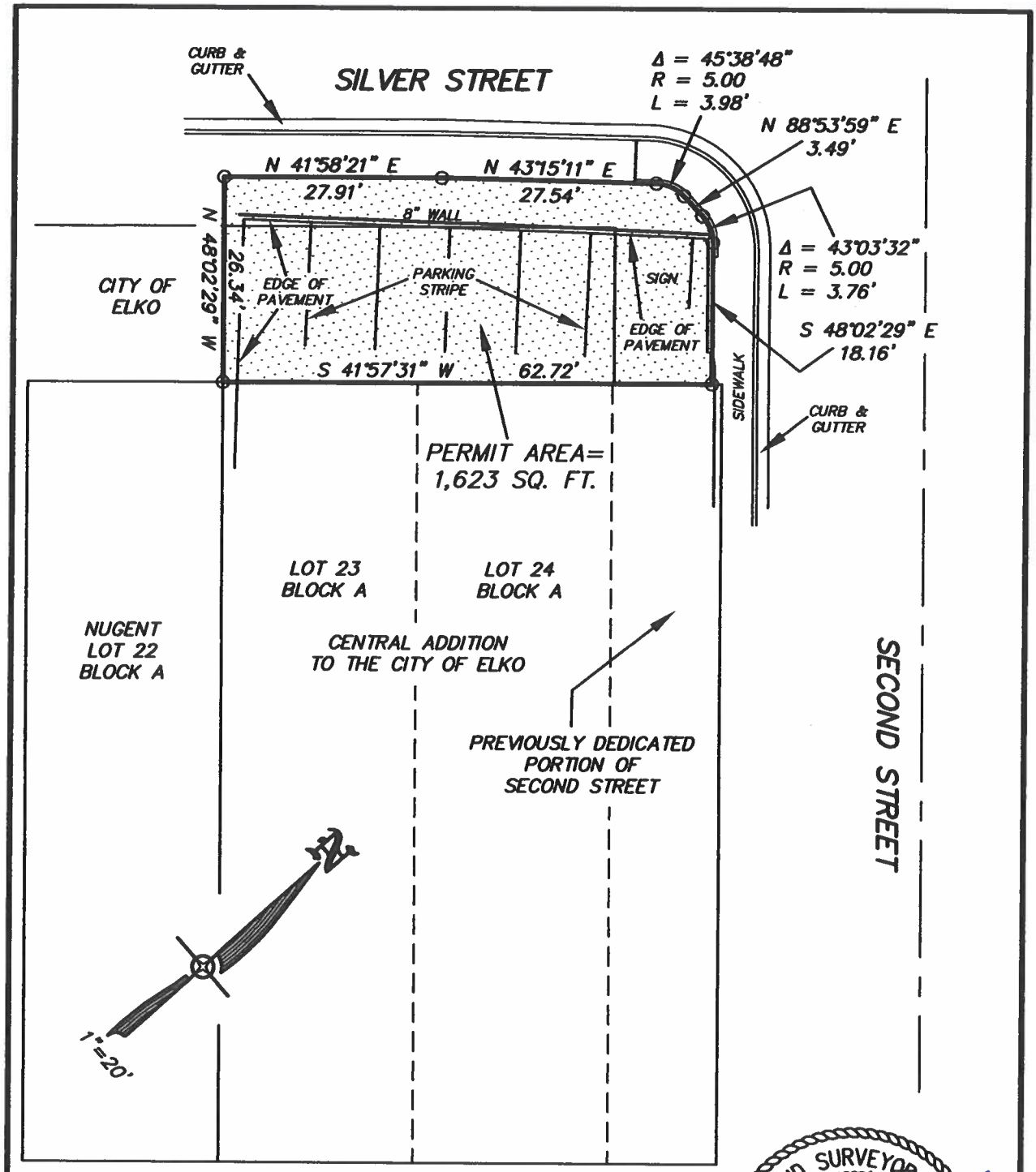

EXHIBIT B
MAP OF AREA FOR REVOCABLE PERMIT
TO OCCUPY CITY OF ELKO PROPERTY
FOR
WALSH RECLAMATION
CITY OF ELKO, NEVADA

PROFESSIONAL LAND SURVEYOR STATE OF NEVADA
ROBERT E. MORLEY
Exp. 12-31-21
No. 6203

11/9/2021

NOV 15 2021

RECEIVED

SITE PLAN FOR WALSH RECLAMATION

BLOCK A, CENTRAL ADDITION TO THE CITY OF ELKO, NEVADA

PROFESSIONAL LAND SURVEYOR STATE OF NEVADA
ROBERT E. MORLEY
Exp. 12-31-21
No. 6203

11/9/2021

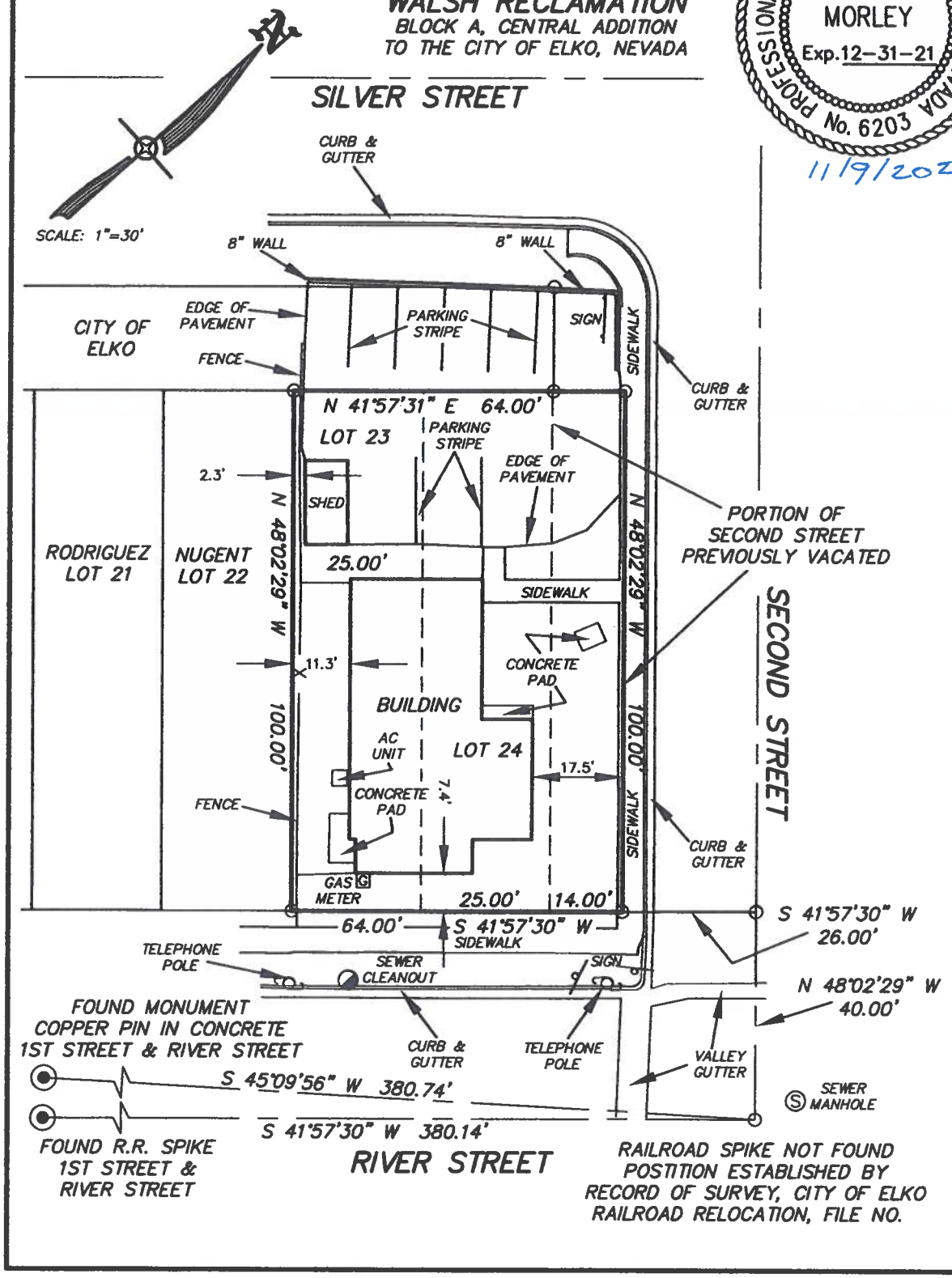

Elko City Planning Commission
Agenda Action Sheet

1. Title: **Special election of Vice Chairperson for the remainder of 2021, and matters related thereto. FOR POSSIBLE ACTION**

2. Meeting Date: **December 7, 2021**

3. Agenda Category: *MISCELLANEOUS ITEMS, PETITIONS, AND COMMUNICATIONS*

4. Time Required: **10 Minutes**

5. Background Information: **Pursuant to Section 3-4-1 (E) of the City Code, vacancies occurring otherwise than through the expiration of term shall be filled for the unexpired term. The planning commission appointed Ms. Tera Hooiman Vice Chairman of the Planning Commission at their special election October 5, 2021 and received her letter of resignation on November 17, 2021.**

6. Business Impact Statement: **Not Required**

7. Supplemental Agenda Information:

8. Recommended Motion:

9. Findings:

10. Prepared By: **Cathy Laughlin, City Planner**

11. Agenda Distribution:

QUINLAN™

August 10, 2021 | Volume 15 | Issue 15

Zoning Bulletin

in this issue:

Takings	1
Historic Preservation Ordinances	1
Zoning Regulations	3
Setbacks	4
Permits	5
Solar Farms	6
Zoning News From Around The Nation	6

Takings

City claims jury verdict erred in finding in favor of development company

Citation: *South Grande View Development Company, Inc. v. City of Alabaster, Alabama, 1 F.4th 1299 (11th Cir. 2021)*

The Eleventh U.S. Circuit has jurisdiction over Alabama, Florida, and Georgia.

A jury found that the City of Alabaster, Alabama engaged in a regulatory taking without just compensation owed to the South Grande View Development Company Inc. (SGVD) concerning a 142-acre parcel of land. As a result, SGVD received an award of around $3.5 million from the city.

The city appealed, contending the lower court improperly allowed evidence concerning its motivation for enacting the ordinance that led to the taking.

DECISION: Affirmed.

While the lower court's decision to allow some of evidence of the city's motivation "beyond [what] was necessary to provide context," this constituted a "harmless" error.

"It was undisputed that developing [an area known as] Sector 16 into [the] R-2 [zone] was not economically feasible," the court wrote. "It was undisputed also that the rezoning occurred after SGV[D] spent a significant sum of money preparing the property for R-4 homes. The only evidence regarding the value of the property before and after the zoning was brought by SGV[D]—in fact, the [c]ity did not call any witnesses. The evidence clearly supported a finding that a taking occurred. Further, the jury awarded an amount that was about $2.5 million dollars less than SGV[D]'s estimate—the only estimate provided to the jury. [The c]ity has not demonstrated any prejudice resulting from the erroneous admission of testimony regarding the [c]ity's motive," the Eleventh U.S. Circuit Court of Appeals wrote.

Historic Preservation Ordinances

Homeowners challenge Houston's HPO claiming it violates zoning statute and city charter's general bar against zoning

Citation: *Powell v. City of Houston, 64 Tex. Sup. Ct. J. 1209, 2021 WL 2273976 (Tex. 2021)*

As a "home-rule" city, Houston's charter barred zoning unless adopted through a binding referendum. In 1995, the Houston City Council adopted the city's Historic Preservation Ordinance (HPO) without a referendum.

THOMSON REUTERS®

Mat #42689128

The original ordinance allowed the city to establish historic districts and required property owners in those districts to seek approval from the Houston Archaeological and Historical Commission (HC) before modifying or developing their property. To get approval, property owners would apply for a certificate of appropriateness from the HC. If the HC denied the application, the owners could wait 90 days and obtain a waiver certificate that allowed them to make the proposed changes to the property.

In 2010, the city placed a moratorium on the waiver certificates and ultimately ended the practice altogether by amending its ordinance. That same year, the city implemented a procedure for reconsidering a neighborhood's designation as a historic district.

The residents of the Heights East District, which had originally designated as a historic district in 2008, sought reconsideration. Their reconsideration efforts were not successful, though, and the city continued to apply the ordinance to Heights East.

Kathleen Powell and Paul Luccia (the homeowners) each owned property in Heights East. They filed suit seeking declaratory judgment that the ordinance was void and unenforceable because 1) it violated the city charter's limits on zoning and 2) it did not comply with certain provisions of Chapter 211 of the Local Government Code.

The lower court denied the homeowners' requests for declaratory relief following a bench trial and granted the city judgment. The homeowners appealed, arguing the ordinance was a zoning regulation.

The appeals court ruled the ordinance wasn't a zoning regulation because "the purposes for which it was created, its function, and its way of regulating property use and development all differ[ed] from those of zoning laws." The homeowners then asked the state's highest court to review the case.

DECISION: Affirmed.

The HPO didn't zone property in violation of city charter's general prohibition against zoning. Also, the city had complied with zoning statute's requirement that the HPO be enacted in accordance with a comprehensive plan. And, the city complied with zoning law's requirement that home-rule municipality appoint zoning commission to implement regulations authorized by statute.

Chapter 211 of the Texas Local Government Code stated that " '[t]he governing body of a municipality may regulate' changes to 'buildings and other structures' in 'areas of historical . . . significance.' " The court found this chapter applied to the ordinance at issue, so the city had authority under Chapter 211 to enact the ordinance.

A CLOSER LOOK

Previous case law indicated some of the features that were common to zoning ordinances, the court explained. These included:

- the "implementation of a comprehensive plan of city-wide development";
- the "division of the city into geographic districts"; and
- "specification of the uses to which land c[ould] be put within each district."

Also, while "geographic comprehensiveness [wa]s informative, we do not suggest that it is essential, which would allow the [c]ity to skirt its [c]harter's notice and referendum requirements by zoning less than all of its territory," the court explained. But, here, the court didn't "need [to] decide at what point the gradual geographic expansion of land-use regulation bec[ame] zoning"—the ordinance didn't "implicate this concern because . . . it regulate[d] less than one percent of lots in Houston."

CASE NOTE

The homeowners claimed the ordinance was void on two grounds—grounds the court rejected. "The City Charter's limitations on the power to zone do not apply to the Ordinance's historic-preservation regulations because they do not fall within the ordinary meaning of 'zoning,' " the court

Contributors

Laura Scott, Esq.

For authorization to photocopy, please contact the **Copyright Clearance Center** at 222 Rosewood Drive, Danvers, MA 01923, USA (978) 750-8400, http://www.copyright.com or **West's Copyright Services** at 610 Opperman Drive, Eagan, MN 55123, copyright.west@thomsonreuters.com. Please outline the specific material involved, the number of copies you wish to distribute and the purpose or format of the use.

This publication was created to provide you with accurate and authoritative information concerning the subject matter covered; however, this publication was not necessarily prepared by persons licensed to practice law in a particular jurisdiction. The publisher is not engaged in rendering legal or other professional advice and this publication is not a substitute for the advice of an attorney. If you require legal or other expert advice, you should seek the services of a competent attorney or other professional.

Zoning Bulletin is published and copyrighted by Thomson Reuters, 610 Opperman Drive, P.O. Box 64526, St. Paul, MN 55164-0526. For subscription information: call (800) 229-2084, or write to West, Credit Order Processing, 620 Opperman Drive, PO Box 64833, St. Paul, MN 55164-9753.

POSTMASTER: Send address changes to Zoning Bulletin, 610 Opperman Drive, P.O. Box 64526, St. Paul, MN 55164-0526.

THOMSON REUTERS®

610 Opperman Drive
P.O. Box 64526
St. Paul, MN 55164-0526
1-800-229-2084
email: west.customerservice@thomsonreuters.com
ISSN 0514-7905
©2021 Thomson Reuters
All Rights Reserved
Quinlan™ is a Thomson Reuters brand

wrote. "Though the same regulations do fall within the scope of Chapter 211 as set by the Legislature, the Homeowners have not demonstrated that the [c]ity failed to comply with" two specific code sections. "Because the [h]omeowners did not clearly demonstrate that the [o]rdinance [wa]s void under either the Charter or Chapter 211, we affirm the judgment of the court of appeals."

THE BOTTOM LINE

The ordinance didn't "regulate the purposes for which land c[ould] be used, lack[ed] geographic comprehensiveness, impact[ed] each site differently . . . to preserve and ensure the historic character of building exteriors, and d[id] not adopt the enforcement and penalty provisions characteristic of a zoning ordinance," the court ruled. That's why the court found this ordinance wasn't "zoning as that concept is ordinarily understood," and it affirmed the decision that the ordinance had not been enacted in violation of Houston's charter.

Zoning Regulations

Was city's ordinance regulating docks a 'zoning regulation'?

Citation: *City of Waconia v. Dock, 961 N.W.2d 220 (Minn. 2021)*

That's the key question the Supreme Court of Minnesota addressed in a recently decided case concerning the City of Waconia's ordinance regulating docks. If the answer was yes, then the city was bound by certain procedural requirements in adopting that ordinance, even though the city contended it had the sole authority to regular docks under state law.

THE FACTS

Jayson and Cristine Dock owned lakeshore property on Lake Waconia. In June 2017, the Docks began building a year-round dock extending from their property into the lake.

A month after the Docks started building the dock, the city adopted Ordinance 705, an interim ordinance that prohibited the construction of any permanent dock for one year. The city then served the Docks with a cease-and-desist letter and began litigation to enforce the ordinance.

The lower court denied the city's request for a temporary injunction against the Docks. It, however, warned the Docks that proceeding with construction would be at their own financial peril should they ultimately lose on the merits of the litigation.

In October 2017, the city repealed Ordinance 705 and enacted Ordinance 707. This ordinance amended the city code to prohibit permanent docks in public waters from riparian (lakeshore) lots within the city. It also required all seasonal docks to be removed from public waters for at least 90 days between November 1 and April 1 of each year.

Ordinance 707's purpose was to "control and regulate [d]ocks for riparian properties that ha[d] shoreline within the city to [e]nsure safety for person and property." Regarding its authority to enact this ordinance, the city cited its power to regulate docks under Minnesota Statutes section 412.221 subdivision 12. It didn't cite its zoning authority under state law, and the ordinance expressly denied regulating the surface use of waters under state law, too.

A month later, the construction on the Docks' dock was nearly completed. The city filed a request for a permanent injunction under the new ordinance to halt further construction of the dock and to require its removal.

The Docks counterclaimed, seeking an injunction to prevent the city from ordering removal of the dock. On the parties' cross-requests for judgment without a trial, the city claimed the Docks had violated the ordinance, and they claimed the ordinance was procedurally defective because:

1) the city hadn't given notice or held a public hearing, as required for a zoning ordinance; and
2) it hadn't received the required agency approval or approval from other townships adjacent to Lake Waconia, as required for a surface-use ordinance.

The city asserted that the ordinance was neither a zoning nor a surface-use ordinance because it was enacted under an independent source of authority under state law.

The lower court granted judgment without a trial to the city. The court found that Ordinance 707 wasn't a zoning ordinance because the city chose to rely on powers granted to it under section 412.221 and not under the zoning or surface-use laws. In addition, because the Docks were in violation of the ordinance, the court granted the city's request for an injunction requiring them to remove their dock.

The Docks appealed, but the reviewing court affirmed the lower court's decision—albeit on different grounds. The appeals court found that Ordinance 707 was not a zoning ordinance because it applied "generally" and did not "regulate activities within specific zones." The appeals court also ruled that the surface-use statute did not apply because 1) Lake Waconia wasn't solely within the city's jurisdiction, and 2) it didn't have any joint powers agreement with neighboring municipalities.

Then, the Docks asked the state's highest court to review the case.

DECISION: Reversed in part.

The city's ordinance was subject to the procedural requirements set forth in state law for municipal zoning, including notice and a public hearing.

"Requiring a city to follow the procedural steps contained [under state law], when adopting what [wa]s, in effect, a zoning regulation, ensure[d] that a municipality respect[ed] the property rights of individuals when that municipality s[ought] to restrict the use and development of private property," the court explained.

Because the court found that Ordinance 707 was "functionally a zoning regulation," the city had "follow the procedures outlined in [Minnesota Statutes section 462.357] for amending or adopting a zoning ordinance," the court ruled. Since the city hadn't complied with those procedural requirements, "including notice and a public hearing,

Ordinance 707 [wa]s void, and the permanent injunction against the [Docks] under the ordinance [was] also void."

THE BOTTOM LINE

"In assessing whether an ordinance serve[d] a zoning purpose, a variety of nonexclusive factors [could] be relevant, including the stated purpose of an ordinance and whether the ordinance operate[d] like a typical zoning regulation," the court explained. Ultimately, the court found, Ordinance 707 was a zoning regulation since it was regulating the location of docks because it prohibited permanent docks from "riparian properties that had shoreline within the city." While the city contended the ordinance amounted to a "citywide ban on permanent docks and that, because the ordinance d[id] not regulate the location of docks within a property, as with a setback requirement, it d[id] not regulate location," within the meaning of section 462.357, the court disagreed.

Setbacks

Realty trust looking to build daycare facility challenges ZBA's denial of its application due to setback requirement

Citation: *Berlin Landing Realty Trust v. Bakstran, 2021 WL 2373617 (Mass. Land Ct. 2021)*

Berlin Landing Realty Trust (BLRT) appealed a decision by the town of Northborough, Massachusetts's zoning board of appeals (ZBA) denying its request for relief from a one dimensional requirement in its proposed development of a childcare facility on property it owned at 5 Bearfoot Road in the town.

BLRT claimed a setback requirement ran afoul to the Dover Amendment, which was codified in Massachusetts General Laws chapter 40A, section 3. In its view, this meant the ZBA's decision had to be annulled.

The ZBA opposed BLRT's request, and hearing on whether to grant the request ensued.

DECISION: Request allowed.

Judgment granted annulling the ZBA's decision about a 100-foot setback for the proposed daycare facility since it was based on "legally untenable grounds."

It wasn't up for debate whether the 100-foot setback requirement was invalid on its face. What BLRT argued was that it was unreasonable as applied to the proposed daycare.

The 100-foot setback requirement "establishe[d] a buffer between the Industrial Zone and residential zones in [Northborough]. Presumably, the purpose of that buffer [wa]s to ameliorate the impact of uses allowed in the Industrial Zone on nearby residentially zoned properties where such uses are not allowed," the court wrote.

THE BOTTOM LINE

"That purpose [wa]s not served by application of the 100-Foot [s]etback [r]equirement here, as the [p]roposed [d]aycare [wa]s permitted as of right in the adjacent residential district," the court added.

A CLOSER LOOK AT THE DOVER AMENDMENT AND CONTROLLING CASE LAW

Here, the parties agreed that a case the state's highest court decided in 2000 controlled on the issue of whether the 100-foot setback requirement could be imposed on the proposed daycare without violating the Dover Amendment, which exempted certain agricultural, religious, and educational corporations from certain zoning restrictions.

In that case—*Rogers v. Town of Norfolk*—a building commissioner and the zoning board told an applicant she would not be granted a building permit for a childcare facility because a local zoning bylaw limited the footprint of such facilities to no more than 2,500 square feet and the proposed facility's footprint was 3,169 square feet.

The Dover Amendment stated that "No zoning ordinance or bylaw in any city or town shall prohibit, or require a special permit for, the use of land or structures, or the expansion of existing structures, for the primary, accessory or incidental purpose of operating a child care facility; provided, however, that such land or structures may be subject to reasonable regulations concerning the bulk and height of structures and determining yard sizes, lot area, setbacks, open space, parking and building coverage requirements."

In *Rogers*, the court found the footprint restriction was valid on its face because the key question to ask was "whether the footprint restriction further[ed] a legitimate municipal interest, and its application rationally relate[d] to that interest, or whether it act[ed] impermissibly to restrict the establishment of child care facilities in the town, and so [wa]s unreasonable." "The provision is facially valid under this test," the court found in *Rogers.*

The *Rogers* court then asked "whether 'the provision [wa]s unreasonably restrictive as applied to [the applicant's] property, keeping in mind that the pertinent language of [the Dover Amendment] [sought] to strike a balance between preventing local discrimination against child care facilities and respecting legitimate municipal concerns.' "

Ultimately, the court in *Rogers* found that "the footprint provision was unreasonable as applied to the applicant's property" because "the applicant's property conformed to the style and character of other homes in the neighborhood, was spacious (58,791 square feet), set back from its adjacent neighbors (by 140 feet, 155 feet and 170 feet respectively), met all generally applicable zoning requirements and had other features that made it 'ideal for child care use.' "

Also when considering these factors against the footprint provision's purpose—"to preserve the residential appearance of the town's neighborhoods" it was clear "that the application of the footprint requirement to the [applicant's] property would significantly impede the use of the premises as a child care facility, while not substantially advancing a valid goal of [the town's] zoning regulation," so the provision had been unreasonably applied.

The case cited is Rogers v. Town of Norfolk, 432 Mass. 374, 734 N.E.2d 1143 (2000).

Practically Speaking:

Concerning the proposed daycare, the 100-foot setback requirement didn't advance the town's legitimate municipal interests and

© 2021 Thomson Reuters

would have meant the daycare project was "unbuildable." "To say that it 'would significantly impede the use of the premises as a childcare facility, while not substantially advancing a valid goal of [the Town's] zoning regulation,' . . . is an understatement," the court ruled.

Permits

Beachfront property the subject of controversy under Coastal Area Facility Review Act

Citation: *Cayre v. New Jersey Department of Environmental Protection/Land Use Regulation, 2021 WL 2587788 (N.J. Super. Ct. App. Div. 2021))*

Jack and Sarah Cayre appealed a decision by the Commissioner of the New Jersey Department of Environmental Protection (DEP) denying an after-the-fact Coastal Area Facility Review Act (CAFRA) application regarding the unauthorized construction of a recreational reinforced concrete pavilion into a beachfront coastal bluff. The DEP Commissioner found that a finding for the DEP was appropriate because the undisputed facts showed that the Cayres' CAFRA permit application did not meet the requirements of the DEP's Coastal Zone Management Rules.

DECISION: Affirmed.

The Cayres' permit application was correctly denied.

A CLOSER LOOK

The Cayres owned oceanfront property located in Deal, New Jersey, which featured a beach at the bottom of a coastal bluff. In 2011, they applied for a CAFRA general permit and a CAFRA individual permit to construct a seawall, pool, and cabana on the property.

In 2012, the DEP denied the permits because the pool and cabana were proposed to be constructed on the coastal bluff located on the property contrary to the rule regarding the permit and the setback requirements regarding coastal bluffs.

Following the devastation caused by Superstorm Sandy in 2012, the Cayres constructed a stone revetment and recreational pavilion into the bluff without seeking authorization from the DEP. The pavilion was a hollow, poured concrete structure that contained live utility connections including gas, electricity, and sewer service. It was also furnished with a restroom, shower, sinks, lights, speakers, television, and a barbeque.

In 2014, the DEP issued a Notice of Violation to the Cayres for constructing the structures without the necessary permits and approvals. The Cayres submitted an after-the-fact application for a CAFRA individual permit for the pavilion which was the subject of this lawsuit. And, in reviewing the after-the-fact application, the DEP requested a wave-scour analysis and a slope-stability analysis to evaluate the shore protection functions of the pavilion.

The Cayres then submitted a report from an engineer, which did not include a scour analysis for the revetment. The engineer stated the revetment and concrete pavilion would not experience direct wave attack during a 100-year intensity storm. He also provided an analysis of the revetment's stability under wave attack, including an estimation of individual stone weight based on diameter and an analysis of the revetment stability under gravitational forces. And he concluded that the revetment "w[ould] not experience direct wave action during the [100-year storm] event" and that scour at the base of the revetment "[wa]s not an issue because of the revetment's location landward of the [100-year storm] water level shoreline."

The DEP denied the after-the-fact permit application in 2015 for noncompliance with the Coastal Zone Management Rules and cited violations of the rules regarding beaches, coastal bluffs, flood hazard areas, housing use, and coastal engineering.

BACK TO THE COURT'S RULING

The court focused on the coastal bluff and coastal engineering rules in deciding this case. "A coastal bluff is a steep slope (greater than fifteen percent) of consolidated (rock) or unconsolidated (sand, gravel) sediment which is adjacent to the shoreline or which is demonstrably associated with shoreline processes," the court wrote. "The Coastal Bluffs Rule describes the sacrificial shore protection function and value of coastal bluffs, and states that coastal bluffs help with flood control and the prevention of storm damage 'by eroding in response to wave action and resisting erosion caused by wind and rain runoff,' " it added. Also, "[t]he rule states that bluff erosion contributes to beach nourishment in places where the bluff faces an open body of water."

"Disturbing coastal bluffs diminishes their resistance to wind and rain erosion, increases the risk of their collapse, and causes 'cuts' in the bluffs. . . . Thus, 'a minimum construction setback on the stable land [wa]s required to protect life and property, and reaffirm[ed] the setback requirement of the erosion hazard area rule.' " And "[t]he Coastal Bluff Rule prohibits development on coastal bluffs with a few exceptions, including shore protection activities which meet the applicable Coastal Engineering Rules," the court explained.

THE BOTTOM LINE

"Construction that does not otherwise meet the narrow exception for shore protection activities under the Coastal Engineering Rule must be set back at least twenty-five feet from the landward bluff crest," the court noted.

Here, the "pavilion and revetment did not meet the setback requirement in the Coastal Bluffs Rule, and the pavilion did not fall within the shore protection exemption as set forth in the Coastal Engineering Rule because the rule favors nonstructural solutions to shoreline erosion issues over structural solutions." Also, "the Cayres did not demonstrate the infeasibility or impracticality of reconstructing the bluff utilizing vegetation and riprap within the original footprint along the entire waterfront portion of the site. Additionally, the DEP had requested a scour analysis to determine the frequency of storm events that could undermine the pavilion and revetment, and [the] 2015 report [the

© 2021 Thomson Reuters

Cayres submitted] did not address the concrete pavilion structure; it only focused on the performance of the revetment. The DEP concluded the information provided did not demonstrate that the pavilion would act as effective shore protection during wave attack."

Generally, the court wouldn't disturb an administrative decision unless it was unreasonable and not supported by the evidence. But, here "it is undisputed a permit was required for the construction of the revetment and pavilion structures," the court ruled. "The DEP correctly applied the Coastal Bluff and Coastal Engineering rules in denying the Cayres' after-the-fact CAFRA permit application, and the [administrative law judge] correctly upheld the DEP's interpretation of those rules."

Case Note:

The court sided against the Cayres, too, on their claim they had been denied due process.

Solar Farms

Did BZA err in approving a special-use application (SUAs) and setback variances?

Citation: *Burton v. Board of Zoning Appeals of Madison County, 2021 WL 2521624 (Ind. Ct. App. 2021)*

Lone Oak Solar Energy, LLC (Lone Oak), a wholly-owned subsidiary of Invenergy, which developed 125 large-scale energy facilities, including 26 solar projects, wanted to develop a 120-megawatt solar energy farm in rural Madison County, Indiana.

The project was originally designed to involve the installation of solar panels over approximately 900 acres of land which Lone Oak had leased in 35 parcels from 23 landowners. Some of the leased parcels were contiguous, and all of land Lone Oak leased for the project was zoned as agricultural.

The project's design includes a decommissioning plan and a soil reclamation plan to return the land to agricultural viability after approximately 35 years. The project also was to include landscaping and buffering from non-participating landowners. And the solar facility was to be staffed with three solar technicians during regular work hours, and traffic on the site was projected to be light-duty pickups and passenger vehicles.

Several neighbors in the area contested zoning board members' votes. They claimed those members' votes should have been invalidated on the grounds that one of the members failed to meet residency requirements and the other member had a conflict of interest or bias. They also contended the Board of Zoning Appeals (BZA) erred in approving a special-use application (SUAs) and setback variances.

DECISION: Affirmed.

The members' votes were valid; and there was substantial evidence to support the BZA's approval of the SUAs and setback variances.

The BZA's granting of the SUAs was consistent with the county's comprehensive plan. That's because:

- the project "directly enhanced and preserved agricultural activities, as it would not result in the permanent loss of agricultural land due to the [d]ecommissioning [p]lan and [s]oil [r]eclamation [p]lan";
- the involved property "would continue to be zoned for agricultural use and would not need to be rezoned at the conclusion of the [p]roject";
- "the soil of the property would be preserved, resulting in fertile soil at the conclusion of the [p]roject"; and
- "the special use would insure that the property involved would not be subdivided for the construction of new homes and, thus, prevented the permanent reduction of agricultural land."

In sum, "[t]hese findings were based upon a report submitted by the staff of the planning commission which was viable evidence that formed a basis for the findings," the appeals court found.

Regarding the members' votes, the court rejected the neighbors' claims. The parties didn't dispute that the one member didn't meet residency requirements for the BZA. But, she "was listed on the agendas for the BZA's . . . meetings as a BZA member, she appeared at and participated in those meeting as a BZA member, and . . . she cast her vote in favor of the [o]riginal [a]pplications. Therefore, we conclude that [this member] was acting as a de facto officer of the BZA because she claimed her office, possessed it by appearing and participating in the BZA's business, and acted under the color of the BZA's authority by casting her vote on the [o]riginal [a]pplications."

On their other conflict-of-interest/bias claim, the court concluded there wasn't sufficient evidence "of a disqualifying bias on [the member's] part. That member had recused herself previously from matters related to Lone Oak. But, "[w]ithout more, the circumstances surrounding [her] previous, voluntary recusal and her statements at . . . hearings did not show that [she] had direct or indirect financial interest in the outcome of the proceedings. . . . Neither did these circumstances demonstrate actual bias," the court found.

THE BOTTOM LINE

"This was not an uncontested matter in which [that member had] ruled against [the n]eighbors, nor was [the n]eighbors' proffered evidence consistent with [her] expressing an opinion on the merits of the [p]roject."

Zoning News From Around The Nation

California

Hillsborough enters into a 'Yabba Dabba Doo' of a settlement with homeowner over her 'Flintstones' house

The city of Hillsborough, California will pay a $125,000 to settlement to a local homeowner whose abode gives a prehistoric nod to all things "The Flintstones," complete with a brightly painted orange and purple house and dino-

 © 2021 Thomson Reuters

saur sculptures, the *San Francisco Chronicle* reported recently.

The homeowner, Florence Fang, bought the property in 2017 for close to $3 million, the news outlet reported. But in 2019, the home, which was built in the 1970s by a renowned architect who achieved the circular rooms of the structure by inflating large balloons and molding rebar and mesh frames in the shape of concrete, which is within view of Interstate 280, was declared a public nuisance. The city filed a lawsuit against Fang, alleging she violated planning approval and building permit requirements concerning changes she made to the landscape of the property, the news outlet reported.

The city claimed Fang violated several city codes, and in response to the lawsuit, Fang counterclaimed, alleging she was being singled out on account of race.

As a condition of settlement, Fang will drop the counterclaims against the city, the news outlet reported. And, the city retains the right to inspect landscape changes Fang makes to the property.

Source: *sfchronicle.com*

Colorado

Majority of U.S.-based structures vulnerable to natural hazards like floods, tornados, and wildfires, new study reveals

Within the contiguous United States, more than half of the structures are vulnerable to the potentially ravaging effects of natural disasters, including tornados, floods, and wildfires. That's according to researchers at the University of Colorado at Boulder.

The study, published in Earth's Future, notes that those responsible for developing land in cities and towns should pay attention to the harsh reality that with climate change comes increased risk of damage that natural hazards can cause, Virginia Iglesias, the lead author of the study and a UC Earth Lab research scientist, told the Cooperative Institute for Research in Environmental Sciences (CIRES).

Iglesias posited whether the way cities and towns are being developed may be leading to increased losses due to natural disasters. And, according to the data, the answer is yes. To study the issue, Iglesias' team constructed hazard maps that they compared against historical land-use data sets from Zillow's housing and property database.

The researchers identified natural hazard "hotspots"—that is, where the risk of an individual natural hazard event ranked in the top 10%, CIRES explained.

Their analysis revealed that 57% of structures built in the contiguous United States sit in "natural hazard hotspots," which comprise about one-third of the nation's total land. And, around 1.5 million of these structures are prone to two or more natural hazards, the researchers concluded.

More information on this study, which discusses the regional development pattern impact on natural hazard risk and the role of local decision makers in improving risk assessments and in understanding how socio-economic factors may put certain neighborhoods and communities at higher risk, can be found at agupubs.onlinelibrary.wiley.com/doi/epdf/10.1029/2020EF001795.

Source: *cires.colorado.edu*

Illinois

Village of Glenview rejects application to rezone residential property to business designation

GW Properties (GW) has been focused on developing a shopping center in the Village of Glenview, Illinois for quite some time. But, while the village approved the final site plan in 2019 on the basis of a dual residential and zoning designation for the lot, which stood as a single residential lot, village residents halted the development project from proceeding by filing a lawsuit, the *Journal & Topic* reported. The residents claimed they had not been provided with proper notice of the dual-zoning that the village was considering, the news outlet reported.

A lower court found the residents could not proceed with their case because the statute of limitations had run out. On appeal, a court reversed, finding that the property was still zoned residential. The appeals court then sent the case back down to the lower court.

Now, the trustees for the village have voted to deny GW's request to rezone the property and to approve a revised site plan for the development project, the news outlet reported.

Source: *journal-topics.com*

Massachusetts

High court takes on issue of whether local zoning board was wrong to ban short-term rentals in residential districts

The Supreme Judicial Court of Massachusetts (SJC) recently ruled on a case raising the issue of whether a local zoning board (ZB) overstepped in determining that the short-term rental of a single-family property owner's dwelling constituted the unauthorized additional use of the property as a "tourist home" or "lodging house," which had been barred before the town of Lynnfield, Massachusetts adopted a new zoning bylaw expressly prohibiting short-term rentals in residential districts.

The case made its way to the SJC after a land court affirmed the ZB's decision. The owner of the property in question appealed, and the case was transferred out of the appeals court onto the SJC's docket.

The state's highest court ruled short-term rentals didn't qualify as a prior nonconforming use exempt from the new bylaw barring such rentals. "Where short-term rentals are at issue, . . . there is an 'absence of stability and permanence of the individuals residing in those districts, [and] the goal is necessarily subverted,' " the court noted. "Giving deference to the board's interpretation of the town's bylaw, . . . we conclude that the board reasonably could determine that use of a 'one family detached house' in a 'single residence district,' as defined in . . . the bylaw, connote[d] a measure of permanency that [wa]s inconsistent with more 'transient' uses."

The court explained the difference between a residence and a short-term rental like this: "A '[r]esidence' is commonly understood to mean 'the place where one actually lives as distinguished from his domicile or a place of temporary sojourn,' " citing *Webster's Ninth New Collegiate Dictionary (1985)*. And, "[a] similar concept of permanency also [wa]s incorporated in the town's definition of 'family,'

© 2021 Thomson Reuters

under . . . the bylaw, to include '[a]ny number of persons living and cooking together on the premises as a single housekeeping unit, as distinguished from a group occupying a boarding house, lodging house, or hotel.' "

When reading these "two terms in context, and giving them a sensible meaning . . . the town 'clearly and unambiguously excluded, in pertinent part, purely transient uses of property in [a residential zoning district],' " the court found. "Both 'family' and 'residence' impl[ied] 'a certain expectation of relative stability and permanence.' "

The bottom line

State law "generally protect[ed] property uses that were lawfully in existence prior to newly adopted restrictive zoning regulations." Here, the property owner claimed use of his family home for short-term rentals constituted a prior nonconforming use that was exempt from Lynnfield's zoning bylaw that, as amended in 2016, expressly forbid short-term rentals in single-residence zoning districts. "He asks the court to overturn the Land Court judge's decision and rule that short-term rentals were permissible prior to the bylaw amendments. We decline to do so," the court added.

The case cited is Styller v. Zoning Board of Appeals of Lynnfield, 487 Mass. 588, 169 N.E.3d 160 (2021).

New York

Company running out of time to file appeal to overturn decision barring it from building a store in Voorheesville

As of print time, Stewart's Shops (Stewart's), which filed suit against the Village of Voorheesville, New York in 2019 alleging it had unlawfully been blocked from constructing a new shop on property it owned, was running out of time to file its appeal in the case, *The Altamont Enterprise* reported recently.

The news outlet reported that a judge had ruled the claim against the village wouldn't stick, and that Stewart's had until July 14, 2021 to file an appeal brief.

The site in controversy was the previous home to a business called Smith's Tavern, the news outlet reported. In a filing with the state court's appellate division, Stewart's noted it would appeal several claims, including the propriety of the village's comprehensive plan and the resultant zoning it adopted.

According to Voorheesville's comprehensive plan, the area where the shop would be located—the Creekside Commercial District—does not permit any "formula businesses," that is chain operations. Stewart's alleges this type of spot-zoning ordinance violates New York State Village Law and is unconstitutional.

In November 2020, a judge threw out Stewart's case, finding that there was a reasonably related legitimate governmental interest behind the zoning code, and that the company didn't meet its burden for showing the code was "arbitrary, capricious, unconstitutional or unlawful."

Source: *altamontenterprise.com*

© 2021 Thomson Reuters

QUINLAN™

August 25, 2021 | Volume 15 | Issue 16

Zoning Bulletin

in this issue:

Conditional Use Permits	1
Short-term Rentals	4
Taking	5
Special Events	6
Zoning News From Around The Nation	7

Conditional Use Permits

Individual who wanted to start a church on Main Street met with resistance from town, told he needed CUP to proceed

Citation: *Henry v. City of Somerton, 2021 WL 2514686 (D. Ariz. 2021)*

Stephen Henry rented a space along West Main Street in Somerton, a small town in the southwestern corner of Arizona. His intent was to start a church called Iglesia Bautista de Somerton.

Because of where the church was going to be located, a conditional use permit (CUP) was necessary prior to opening. The CUP applied to any entities classified under the ordinance, which included religious assemblies, schools, day cares, and others.

At least 11 entities along Main Street had obtained CUPs, and three of those were churches. Some other uses, such as fraternal organizations and social clubs, were "permitted uses" and did not need a CUP under the ordinance.

Prior to 2008, churches and places of worship had been banned on Main Street under the ordinance, as well as gas stations, car dealerships, and manufactured homes. But, in 2015, the ordinance was overhauled and religious assemblies could operate under a CUP.

Before Henry leased the space on Main Street, the landlord told him he would need a CUP to operate a church there and asked the city's community development manager (CDM) whether a CUP would be approved. The CDM said the city likely would not want a church there, and instead would prefer a sports bar, which was already being considered for Main Street.

Henry, who rented the property, did not apply for a CUP and started doing work on the property in preparation of using it as a place of worship. He claimed he did some minor electrical repairs that anyone could do without a permit. But the city's building inspector thought otherwise and said he needed a permit for it.

When the building inspector went to inspect the premises, he found wires on the floor and issued a stop-work order for unauthorized electrical repair.

Then, the CDM told Henry he couldn't get the required permits until after he obtained the CUP. Henry disagreed that he needed permits and said he had no plans of completing the CUP application because the city ordinance conflicted with state and federal laws protecting the free exercise of religion.

Henry operated the church despite orders not to do so, and the city notified him that it would prepare a criminal citation against him for violating the ordinance unless he obtained the CUP and appropriate work permits.

THOMSON REUTERS®

Mat #42689131

Henry didn't budge, so criminal citations followed for operating the church without the CUP.

Meanwhile, the Department of Justice (DOJ) began examining the ordinance. The DOJ told the city it was looking into whether the ordinance violated the Religious Land Use and Institutionalized Persons Act (RLUIPA). In response, the city dismissed one misdemeanor citation against Henry for not obtaining a CUP. But it continued to prosecute the misdemeanor for the unpermitted electrical work.

The state attorney general's office then wrote a letter to the CDM advising her that the ordinance appeared to violate Arizona's Free Exercise of Religion Act (FERA). The AG stated an amendment to the ordinance was encouraged.

In September 2017, the city amended the ordinance, removing the requirement for religious assemblies to obtain a CUP to operate along Main Street. Once the amendment took effect, religious assemblies, including Henry's Iglesia, no longer needed a CUP.

The state attorney general's office then wrote a letter to the CDM advising her that the ordinance appeared to violate Arizona's Free Exercise of Religion Act (FERA). The AG stated an amendment to the ordinance was encouraged.

The charges against Henry related to the electrical work were eventually dropped because the city hadn't provided notice to Henry and the city had failed to follow its own procedures in issuing it.

THE LAWSUIT

Henry filed suit against the town. He claimed it violated FERA and constituted prior restraint on religious exercise in violation of the First Amendment. The court had to decide if judgment without a trial was warranted.

DECISION: Judgment to the city granted for all but one claim.

All that remained was to determine what relief Henry was entitled to under FERA.

Henry—and the church—lacked standing for the prior restraint claim because they "never suffered a concrete, actual, or imminent injury as a result of the CUP evaluation process."

Henry contended that his injury consisted of costs incurred as a result of defending the civil and criminal complaints against him for failing to obtain either the electrical permits or a CUP, which traced back to the enforcement of the ordinance.

"To be clear, this enforcement injury does not and cannot arise from any evaluation of a CUP application," the court wrote. Henry never submitted an application, it added.

Henry's injury arose "from enforcing the requirement that religious assemblies obtain a CUP before operating. As stated in the January 2017 criminal complaint against . . . Henry, he was prosecuted because he 'opened and began operating a church . . . without having obtained a proper Conditional Use Permit.' " "Because there [wa]s no injury related to the CUP evaluation process, [he didn't] have . . . standing to argue against the CUP evaluation process' constitutionality."

CITY OFFICIALS ENTITLED TO QUALIFIED IMMUNITY

The CDM and building inspector were entitled to qualified immunity in this case, too.

With respect to the CDM, the court found that "a rea-

Contributors

Laura Scott, Esq.

For authorization to photocopy, please contact the **Copyright Clearance Center** at 222 Rosewood Drive, Danvers, MA 01923, USA (978) 750-8400, http://www.copyright.com or **West's Copyright Services** at 610 Opperman Drive, Eagan, MN 55123, copyright.west@thomsonreuters.com. Please outline the specific material involved, the number of copies you wish to distribute and the purpose or format of the use.

This publication was created to provide you with accurate and authoritative information concerning the subject matter covered; however, this publication was not necessarily prepared by persons licensed to practice law in a particular jurisdiction. The publisher is not engaged in rendering legal or other professional advice and this publication is not a substitute for the advice of an attorney. If you require legal or other expert advice, you should seek the services of a competent attorney or other professional.

Zoning Bulletin is published and copyrighted by Thomson Reuters, 610 Opperman Drive, P.O. Box 64526, St. Paul, MN 55164-0526. For subscription information: call (800) 229-2084, or write to West, Credit Order Processing, 620 Opperman Drive, PO Box 64833, St. Paul, MN 55164-9753.

POSTMASTER: Send address changes to Zoning Bulletin, 610 Opperman Drive, P.O. Box 64526, St. Paul, MN 55164-0526.

THOMSON REUTERS®

610 Opperman Drive
P.O. Box 64526
St. Paul, MN 55164-0526
1-800-229-2084
email: west.customerservice@thomsonreuters.com
ISSN 0514-7905
©2021 Thomson Reuters
All Rights Reserved
Quinlan™ is a Thomson Reuters brand

sonable official requiring a church to obtain a CUP, as directed to do by the [c]ity's [o]rdinance, would not know they might be violating a clearly established right." For this reason, the CDM was entitled to qualified immunity.

As for the building inspector, he, too, was entitled to qualified immunity. "A reasonable building inspector would not have known that by issuing a Stop Work Order because of suspected unpermitted electrical work and subsequently filing a complaint with the Registrar of Contractors, he was potentially violating constitutional rights."

THE BOTTOM LINE

FERA provided "a cause of action when a governmental entity substantially burden[ed] a person's exercise of religion." It also stated that the government could "not impose or implement a land use regulation in a manner that treat[ed] a religious assembly or institution on less than equal terms with a nonreligious assembly or institution, regardless of a compelling governmental interest."

While the town argued there wasn't enough evidence at this stage of the proceeding to show that "churches generally, and . . . [H]enry's . . . church particularly, were not treated the same as other similar uses," the "plain language" of FERA did "not concern itself with whether the government ha[d] a compelling reason for why it treats religious assemblies differently. Even if the 'burden' of 'traffic and parking' were a compelling interest, that point [wa]s irrelevant to this particular FERA analysis. . . . The question [wa]s whether the [o]rdinance treated the Iglesia 'on less than equal terms with a nonreligious assembly or institution, regardless of a compelling governmental interest.' "

Here, the "undisputed evidence show[ed] churches were treated on less than equal terms than nonreligious assemblies." For instance:

- the ordinance did not require nonprofit fraternal or social club organizations to apply for a CUP; and
- community and recreation centers also did not need a CUP.

Thus, the ordinance's CUP requirement treated the church on less than equal terms than nonreligious assemblies, and since there was no genuine dispute of material fact on that, Henry was entitled to judgment on the FERA claim.

Case Note:

"FERA does not say that land use regulations may treat religious assemblies and some nonreligious assemblies with similar traffic schedules on less than equal terms than other nonreligious assemblies," the court wrote. "FERA says land use regulations may not treat a religious assembly 'on less than equal terms with a nonreligious assembly.' "

Cell tower provider challenges city's decision to deny application to construct a new tower

Citation: *North American Towers LLC v. City of Lakeland, 2021 WL 2941759 (M.D. Fla. 2021)*

North American Towers LLC (NAT), which serviced personal wireless telecommunications providers by "locating, leasing, zoning, constructing, and owning personal wireless service facilities," wanted to build a 150-foot telecommunications tower on a 10.9-acre plot of land located within the City of Lakeland, Florida that it leased from Samuel and Stacy Houghton.

The Houghton's property was described as being heavily wooded, low lying, and functioning as part of the natural drainage basin for Lake Hunter since it was within 500 feet of the lake.

The proposed cell tower would be located "in the center of [the property, approximately] 370 [feet] from the north property line, 330 [feet] from the east property line, 300 [feet] from the south property line, and 331 [feet] from the west property line."

In February 2018, North American applied to the city to construct the cell tower on the Houghton property. At that time, the Houghton property was zoned Multi-Family District (MF-12) with a future land use designation of "Residential Medium."

The city's land development code explained that multi-family districts were intended "to provide for single-family attached and multi-family residential development at a variety of densities which are consistent with the existing and desirable future pattern of development in the city. The use restrictions protect multi-family residential development from the encroachment of incompatible land uses."

The code also provided that cell towers could only be built on MF-12 zoned property when the property "contain[s] a non-residential land use such as a golf course, parking lot, cemetery, church, school, electric utility substation[,] or [the property is] a vacant parcel of 50 acres or more."

The Houghton property didn't meet the code's conditions to erect the cell tower on MF-12 zoned property, so NAT applied to rezone it to "Limited Development" (LD). LD zoning meant that "rural, agricultural, conservation and recreation land uses" were permitted "where appropriate and where consistent with the existing and desirable future pattern of development."

Cell towers could be constructed on LD-zoned property within 2,000 feet of a covered lake as a conditional use. To be approved for a rezoning and conditional use, the petitioner had to submit an application with the city, which was first reviewed by the city's staff.

The city staff presented a recommendation to the city's Planning and Zoning Board, which conducted a public hearing. And, upon the board's approval, the city attorney's office drafted the appropriate ordinances and provided them to the city commission.

© 2021 Thomson Reuters

In this case, the city commission held a hearing at which testimony and evidence was presented that several existing cell towers were already visible from Lake Hunter and that approving the proposed cell tower would result in an unacceptable level of visual clutter to the viewshed from Lake Hunter. Then, the application was denied.

NAT filed suit seeking an order declaring the city's denial of its application null and void and an injunction requiring the city to approve its application.

DECISION: NAT's request for judgment denied.

The commission had valid reasons for denying the application.

The commission had received and reviewed evidence, including testimony from citizens and presentations by city staff and NAT, prior to voting on NAT's application. It had discussed its reasoning prior to and after voting, "and a complete reading of the record demonstrate[d] that the basis for [its] denial included aesthetic and compatibility considerations."

THE BOTTOM LINE

There was substantial evidence, including testimony and presentations as to the impact the cell tower would have on the aesthetics.

CASE NOTE

The court explained that "review of a local government's decision to deny a cell tower application [wa]s colored by the requirements of the local zoning ordinance." Here, the city's development code noted eight factors the commission had to consider when weighing whether to approve the construction of a cell tower as a conditional use:

- the height and visual obtrusiveness of the facility;
- the degree of visibility from the public view;
- the proximity of the facility to residential structures and residential district boundaries;
- the character of the uses and structures on adjacent and nearby properties;
- the character of the land, including topography and tree coverage;
- the design of the facility with particular reference to design characteristics that have the effect of reducing or eliminating visual obtrusiveness;
- the degree to which the facility reduces the proliferation of visually obtrusive structures through co-location; and
- competent evidence that reasonable alternatives to the proposed conditional use do not exist.

Practically Speaking:

The Houghton's property was zoned as MF, which meant multi-family residential development was compatible, but a proposed cell tower was not.

Short-term Rentals

City enacts and amends comprehensive zoning ordinances, property owner says limits on operation of STRs unconstitutional

Citation: *Hignell v. City of New Orleans, 2021 WL 2886213 (E.D. La. 2021)*

Melissa Hignell filed suit against the City of New Orleans after it enacted and amended several city comprehensive zoning ordinances (CZOs) and the city code regulating short-term rentals (STRs).

The CZOs imposed rules and regulations regarding STRs in the city. In addition, STRs needed a permit to operate, and the city code provided several other licensing (including procedural) requirements and restrictions. For example, license holders who advertised on Internet hosting platforms had to:

- advertise their homes as permitted by their STR license;
- advertise the number of individuals allowed to occupy the bedrooms as required by the STR regulations; and
- include their licensing number on the listing and post their license on the front of the home, making it visible from the street (including their name, contact information, how many bedrooms are licensed in the home, and how many of the homeowner's guests may be present there).

Hignell asked the court for a temporary restraining order and/or a preliminary injunction to block the city's enforcement of the CZOs. Hignell claimed the CZOs violated property owners rights under the Fourth, Eighth, and First Amendment's freedom of association and assembly clause.

The court granted the city judgment without a trial on the claims. But then the court ordered the parties to submit memos on the viability of Hignell's claim that the restrictions the CZOs sought to place on online speech claims violated the First Amendment's Free Speech Clause.

DECISION: The STR ordinance's requirement for specific disclosures on Internet sites was constitutionally permissible.

Such disclosures weren't "unduly burdensome and [we]re reasonably related to the [c]ity's interest in preventing deception of consumers."

A CLOSER LOOK

The First Amendment barred the government from making law prohibiting "the free exercise . . . or abridging the freedom of speech." This amendment was "written in absolute terms, but the Supreme Court ha[d] never accepted the view that the First Amendment prohibit[ed] all government regulation of expression," the court noted.

© 2021 Thomson Reuters

Prior restraint—"A prior restraint [wa]s the government's attempt to censor speech before it [wa]s ever uttered and usually used for licensing and injunctions. Prior restraints [we]re not unconstitutional per se but b[ore] a heavy presumption against its constitutional validity."

Municipalities enjoyed the authority to license activities within their limits, and the authority was broad so long as the "licensing requirement" did not "further impede First Amendment interests." This meant that for a licensing requirement to be permissible, it had to "serve an important government purpose, have clear, nondiscretionary licensing criteria, and there must be procedural protections."

Courts generally applied a balancing test to determine if an ordinance was offensive, the court explained, citing the Supreme Court's decision in *Watchtower Bible & Tract Society of New York Inc. v. Stratton.* In that case, the Court "looked to precedent and used a balancing test between affected speech and governmental interests to determine whether an ordinance that prevented door-to-door solicitations in the absence of a permit violated the First Amendment." The Court there found an ordinance to be "offensive" to the First Amendment "because it banned a significant amount of noncommercial speech and that it was not tailored to the stated government interests."

Here, though, the balancing test wasn't necessary because the city ordinance "lack[ed] clear, nondiscretionary licensing criteria and 'the mere existence of the licensor's unfettered discretion, coupled with the power of prior restraint, intimidate[d] parties into censoring their own speech, even if the discretion and power [we]re never actually abused.' "

This meant that Hignell had a viable First Amendment claim; however, the disclosure requirements could stand. Such disclosures weren't subjected to heightened scrutiny because they merely required "the disclosure of 'purely factual and uncontroversial information.' "

The First Amendment barred the government from making law prohibiting "the free exercise . . . or abridging the freedom of speech."

THE BOTTOM LINE

The city had "an interest in protecting guests and ensuring properties listed [we]re properly licensed and operating within their permits." "By requiring the display of permits outside the short-term rental, guests [could] easily identify the correct property and the public [wa]s informed of whom to contact in case of property-related issues." Also, the "the required disclosures [we]re already a matter of public record."

The case cited is Watchtower Bible and Tract Society of New York, Inc. v. Village of Stratton, 536 U.S. 150, 122 S. Ct. 2080, 153 L. Ed. 2d 205 (2002).

Taking

Plaintiffs claim they're entitled to just compensation in case related to construction of pedestrian and cyclist bridge

Citation: *Kiasantana LLC v. Tri-County Metropolitan Transportation District of Oregon, 2021 WL 2903228 (D. Or. 2021)*

Kiasantana LLC and Koerner Camera Systems Inc. (collectively the plaintiffs) claimed the city of Portland, Oregon and the Tri-County Metropolitan Transportation District of Oregon (the defendants) allowed for the construction of a pedestrian and cyclist bridge that partially blocked commercial trucks' access to a loading dock on their property, which made it more difficult for them to operate their business.

The plaintiffs alleged the defendants owed them just compensation for the taking of private property for public use. The defendants asked the court to dismiss the lawsuit.

DECISION: Request for dismissal granted.

The federal takings claim failed because "isolated and temporary intermittent trespasses d[id] not rise to the level of a section 1983 claim."

Also, the plaintiffs hadn't "alleged any municipal policy that caused complete, even if temporary, blockage of all access to the [p]roperty." They only provided conclusory allegations in their complaint.

A CLOSER LOOK

The plaintiffs claimed they had an existing property right under the state common law to continuing vehicular access to the *entire* street frontage abutting their property. They asserted, therefore, that this property right was the subject of their takings claim.

To determine whether the plaintiffs had such a property right, the court looked to Oregon state law. The Supreme Court of Oregon had previously ruled that there were "three governing principles regarding the common-law right of access of a property owner to an abutting public road. First, it is well established that a common-law right of access by property owners attaches to property as an interest in land. Specifically, an abutting property owner holds an easement of access, appurtenant to the abutting land, for the limited purpose of providing a means of ingress and egress to and from the owner's property by means of the abutting public road. Second, the right of access to an abutting road is limited in scope. An abutting property owner does not have an absolute right to access an abutting road at the most direct or convenient location. Rather, the owner has a qualified right that is subject to the government's interest in regulating the safe use of public thoroughfares. Third, the owner's right of access ensures only reasonable access to and from the owner's property by means of the abutting road."

© 2021 Thomson Reuters

Thus, the main point among those three principles was that "*When governmental action interferes with an abutting landowner's right of access for the purpose of ensuring the safe use of a public road, and the abutting landowner retains reasonable access to its property, no compensable taking of the property owner's right of access occurs.*"

Therefore, a property owner in Oregon didn't have any reasonable expectation or valid property interest "in an unchanging form of access to the owner's property, provided that 'reasonable access' remain[ed]."

"[R]easonable access," which could be decided by a judge as a matter of law, did not mean "a permanent right to unchanging access," the court explained.

THE BOTTOM LINE

The plaintiffs did "not plausibly allege that they d[id] not have adequate means of ingress and egress or access to [the street]. Nor do they allege that commercial trucks cannot access the [p]roperty at all or that [it was] otherwise inaccessible to vehicles," the court added. All the plaintiffs alleged was that it had been more "inconvenient for commercial trucks to load and unload because the [bridge] now block[ed] direct access to the loading dock as it [wa]s currently constructed."

Practically Speaking:

"Inconvenient access . . . [wa]s not necessarily unreasonable access," therefore the plaintiffs didn't have a property interest under state law and their federal takings claim could not proceed.

Special Events

Lawsuit alleges football franchise violated the residents' equal protection rights by seeking to hold car-racing events

Citation: *Ferguson v. Dolphins, 2021 WL 2823581 (S.D. Fla. 2021)*

Residents and homeowners associations in Miami claimed the Miami Dolphins football team (the team) violated state, county, and city laws with large-scale, Formula One car-racing at the Hard Rock Stadium, located in their neighborhood.

The team asked the court to dismiss the case arguing, among other things, that it had not violated the plaintiffs' equal protection rights.

DECISION: Request for dismissal granted.

The plaintiffs didn't have valid equal protection claims.

The court sympathized with the plaintiffs' "deep frustration with having an event of this magnitude, and all its attendant negative impacts on their quality of life." But it noted it was "acutely aware of the context in which this ar[ose], where another community's campaign against the spectacle's taking place in their backyard was successful," it added.

A CLOSER LOOK

The plaintiffs claimed the contemplated Formula One races would:

- constitute extremely disruptive noise;
- cause hearing damage;
- interfere with activities at close to 20 churches within a 2.5-mile radius of the stadium;
- cause air pollution;
- lead to neighborhood traffic jams and blocked roads;
- cause lengthy delays; and
- lead to an overcrowding of public transportation.

The controversy over whether to allow the team to hold the car races at the stadium was drawn out. There were many meetings with the county commissioner and the team launched a social media campaign targeting residents and criticizing the county commissioners who opposed the plan. The team highlighted the $400 million in economic impact for the area, including 35,000 hotel-room rentals and 4,000 new jobs.

In the end, a proposed zoning ordinance that would have required special-events permits from Miami Gardens and the county for any car racing, even if confined to stadium grounds didn't pass. The plaintiffs argued that their voices were drowned out in favor of the economic benefit the county would receive from the racing.

But, the court, while sympathetic, could only rule on the issue before it. "[T]he [c]ourt does not find the [p]laintiffs' allegations of the [c]ounty's historical discriminatory actions and policies, set decades in the past and left untied to the current challenged action, to set forth a plausible claim of discriminatory intent with respect to the Miami Grand Prix," it wrote.

THE BOTTOM LINE

There wasn't a single allegation that "would support a finding that the [c]ounty approved holding the Miami Grand Prix in Miami Gardens *in order to* discriminate against its . . . residents," based on the color of their skin. In the end, what seemed to be true if evaluating the case based on the plaintiffs' own allegations was that the county's decision "was driven solely by race-neutral economic and political motivations."

Practically Speaking:

Without evidence that the county's approval of the race was meant to discriminate against the residents, the claim failed.

© 2021 Thomson Reuters

Zoning News From Around The Nation

California

Berkeley's Othering & Belonging Institute releases report on origins of structural racism

In June 2021, The University of California at Berkeley's Othering & Belonging Institute has released a new report, *The Roots of Structural Racism Project: Twenty-First Century Racial Residential Segregation in the United States*. The report's authors also made available an interactive mapping tool (*belonging.gis-cdn.net/us_segregation_map/#2010*), which shows segregation levels in each city, region, and neighborhood nationwide. The report also contains profiles concerning nine cities' levels of segregation or integration.

To download the report, which was released following the center's investigation of racial residential segregation, visit *belonging.berkeley.edu/roots-structural-racism*.

Source: *belonging.berkeley.edu*

Massachusetts

NBER studies impact of local residential land-use restrictions on land values for single-family housing markets

Bay State-based National Bureau of Economic Research (NBER) has released a study exploring the impact of local residential land use restrictions on land values for single family housing markets. According to NBER's website, it used microdata on vacant land bought to develop single-family housing. It concluded that "zoning taxes are especially burdensome in large coastal markets. However, . . . more recent data indicates that price impacts in the big west coast markets now are the largest in the nation."

"In the San Francisco, Los Angeles, and Seattle metropolitan areas, the price of land everywhere within those three markets having been bid up by amounts that at least equal typical household income," it added.

Also, NBER said "zoning tax estimates [we]re strongly positively correlated with a new measure of local housing market supply constraint (the Wharton Residential Land Use Regulatory Index of 2018). This relationship is not mechanically driven as the regulatory index is constructed from survey data that do not incorporate land or house price data in any way."

To download this NBER paper, visit *nber.org/system/files/working_papers/w28993/w28993.pdf*.

Source: *nber.org*

Minnesota

Brainerd discusses comprehensive updates to zoning code

Preserving the character and feel of the neighborhoods is a priority as Brainerd's city council studies which comprehensive zoning code updates to make, the *Brainerd Dispatch* reported recently. The city is contemplating whether to base updates on the character of a given neighborhood rather than building use now that Swanson Haskamp Consulting, which it hired in 2020, has completed its analysis, the news outlet reported.

Representatives from the consulting firm is working with the city planning commission to develop character-based zoning standards—which focus on the physical development's form or character rather than single use. To do this, they will identify and label each Brainerd neighborhood's defining characteristics, the news outlet reported. Words used to describe a neighborhood's character may include terms like compact, pedestrian-centric urban center; one-level living with larger yards on cul-de-sac streets.

The news outlet reported that the consulting firm also conducted a non-conforming study of Brainerd, which revealed that as many as 44% of its residential lots were non-conforming.

Source: *brainerddispatch.com*

New Jersey

Toms River moves forward with DOJ consent decree to settle RLUIPA claims

Earlier this year, the Department of Justice (DOJ) settled claims against Toms River, New Jersey over zoning code provisions restricting houses of worship, the DOJ explained in a press release. And, in July 2021, the township approved a zoning code amendment to permit houses of worship to operate on two-acre parcels, *Asbury Park Press* (APP) reported recently.

The DOJ had entered into a consent decree to resolve a lawsuit alleging that the township's "zoning code place[d] unreasonable limits on where religious assemblies and institutions may locate, substantially burdens religious exercise and treats religious assemblies and institutions on less than equal terms with nonreligious assemblies and institution," the DOJ noted.

"RLUIPA protects people of all faiths in their right to exercise their religion," said Principal Deputy Assistant Attorney General Pamela Karlan of the DOJ's Civil Rights Division. "The [DOJ] has long enforced RLUIPA against zoning regulations that unreasonably burden religious exercise by imposing unwarranted restrictions and conditions on the location of houses of worship," Karlan added.

It's important to note that under federal law, religious communities cannot be subjected to "unequal treatment and unwarranted burdens," explained Rachael Honig, acting U.S. attorney for the District of New Jersey. "Zoning regulations that impose unreasonable restrictions or prevent religious faiths from having a place to worship violate RLUIPA. Through the resolution entered today, this office takes another step to put an end to unlawful zoning practices and vindicate the civil rights of minority religious communities in the District of New Jersey," Honig added.

The lawsuit against Toms River arose after it enacted zoning code revisions, including a 10-acre parcel minimum requirement, "which greatly reduced both the number of zoning districts in which houses of worship can

© 2021 Thomson Reuters

locate and the number of sites available for houses of worship," the DOJ explained. "These restrictions have had a particular impact on the Township's Orthodox Jewish population, who, because of their faith and religious traditions, tend to worship at small houses of worship which they walk to and from on the Sabbath and holidays. The complaint also alleges that the Township's zoning ordinance treats houses of worship and other religious assemblies and institutions on less favorable terms than nonreligious assemblies and institutions."

APP reported that a RLUIPA expert along with the township's assistant attorney recommended that Toms River should enter into the consent decree because it could have faced $10 million in fines if it hadn't come to terms.

Sources: *app.com*; *doj.gov*

New York

Zoning rule changes set for public hearing in Huntington

Several residents in Huntington, New York, recently expressed concern to Councilman Mark Cuthbertson, about proposed zoning code changes, *Huntington Now* reported. Now, other councilmembers have said they would support withdrawing the proposal from the council's agenda, the news outlet reported.

In response, another councilmember, Ed Smyth, issued a press release urging residents to attend the town meeting to express their opinions about the zoning code proposal, *Huntington Now* reported.

The proposed changes have to do with apartment buildings located within 1,500 feet of Huntington's five hamlet-center borders. Specifically, the proposed measure would give the planning board authority to grant special-use permits for those apartment buildings, the news outlet reported.

Source: *huntingtonnow.com*

North Carolina

Asheville's Planning & Zoning Commission considers Urban Place Form Code District

Urban centers are part of Asheville, North Carolina's comprehensive plan, *Living Asheville* (available at *online.flippingbook.com/view/106269/*), the city explained recently on its website. "They are intended to foster higher density, mixed-use development that is economically viable and pedestrian oriented in a way that contributes to placemaking in the city," it noted.

As of print time, the city's Planning & Zoning Commission was considering a draft of the Urban Place Form Code District (UPFCD), which is designed "to implement transit-supportive land use recommendations as proposed in Living Asheville, the city's comprehensive plan. The Urban Place Form District will align with proposed Urban Centers of the city's Future Land Use Map," the UPFCD draft states.

"The vision is to support reinvestment through denser land use patterns that take advantage of the [c]ity's bus system. It is designed to improve walkability and neighborhood quality of life while bringing housing closer to jobs by focusing on property located on high-frequency transit corridors," the city explained on its website.

The UPFCD was developed "with an emphasis on the physical form as the organizing principle of the code," the city wrote "Form-based codes address the relationships between structures and the public realm to create regulations that are more predictable, particularly because of the greater reliance on visuals and graphics to highlight expected results."

For more information on the UPFCD, visit *ashevillenc.gov/news/ashevilles-urban-center-zoning-initiative-moves-forward-to-planning-zoning-commission/*.

Source: *ashevillenc.gov*

Ohio

RVs, commercial, and fleet vehicles the likely subjects of a zoning code study in Fairfield

The Township of Fairfield, Ohio is likely to create a task force to study parking for recreational, commercial, and fleet vehicles, *The Cincinnati Enquirer* reported recently. A study may be necessary now that Fairfield's zoning commission has rejected proposed changes to the zoning code text that would have restricted where such vehicles could be parked, the news outlet reported. Some residents have expressed concern, arguing restrictive code provisions could negatively impact residents with home-based businesses or those who house vehicles on their property for on-call assignments, the news outlet reported.

Source: *cincinnati.com*

Pennsylvania

Fate of short-term rentals being debated in Erie

In Erie, Pennsylvania, city officials are considering what to do about short-term rentals, Goerie.com reported recently. In 2017, the local zoning hearing board found a property owner could use her home as a short-term Airbnb rental, the news outlet reported because the city's residential zoning code didn't specifically bar the use. But then in 2019, in *Slice of Life v. Hamilton Township Zoning Hearing Board*, the state's highest court that short-term rentals were barred unless a local municipal code expressly allowed them. As a result, the city's planning commission recently approved zoning code changes that addresses short-term rentals, the news outlet explained. Now, it will be up to the city council to vote on whether to accept the proposed amendment, which would require property owners to get a residential rental license to offer short-term rentals. Also, recreational vehicles, campers, and tents would be prohibited from overnight occupancy, the news outlet reported.

In June 2021, the city announced it would hold a virtual study session on short-term rentals.

Sources: *goerie.com*; *cityof.erie.pa.us*

© 2021 Thomson Reuters