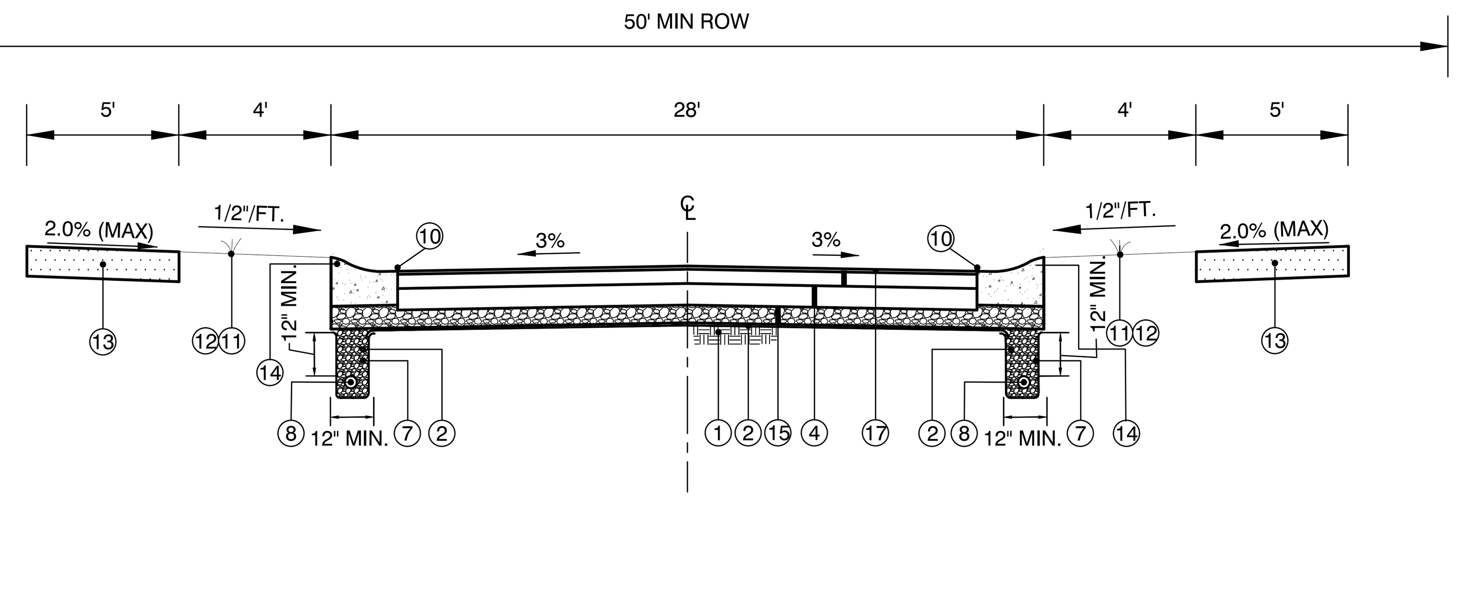

RESIDENTIAL ASPHALT PAVEMENT SECTION WITH EDGE DRAIN

N.T.S.

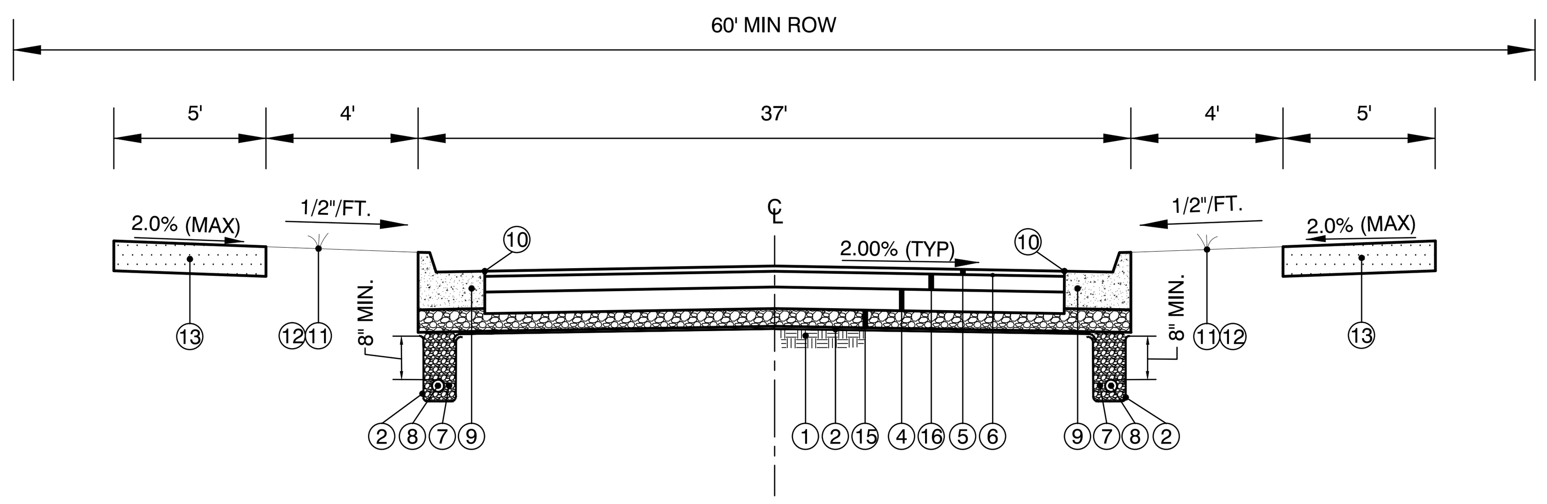

MINOR ARTERIAL, COMMERCIAL, & INDUSTRIAL TYPICAL SECTION

N.T.S.

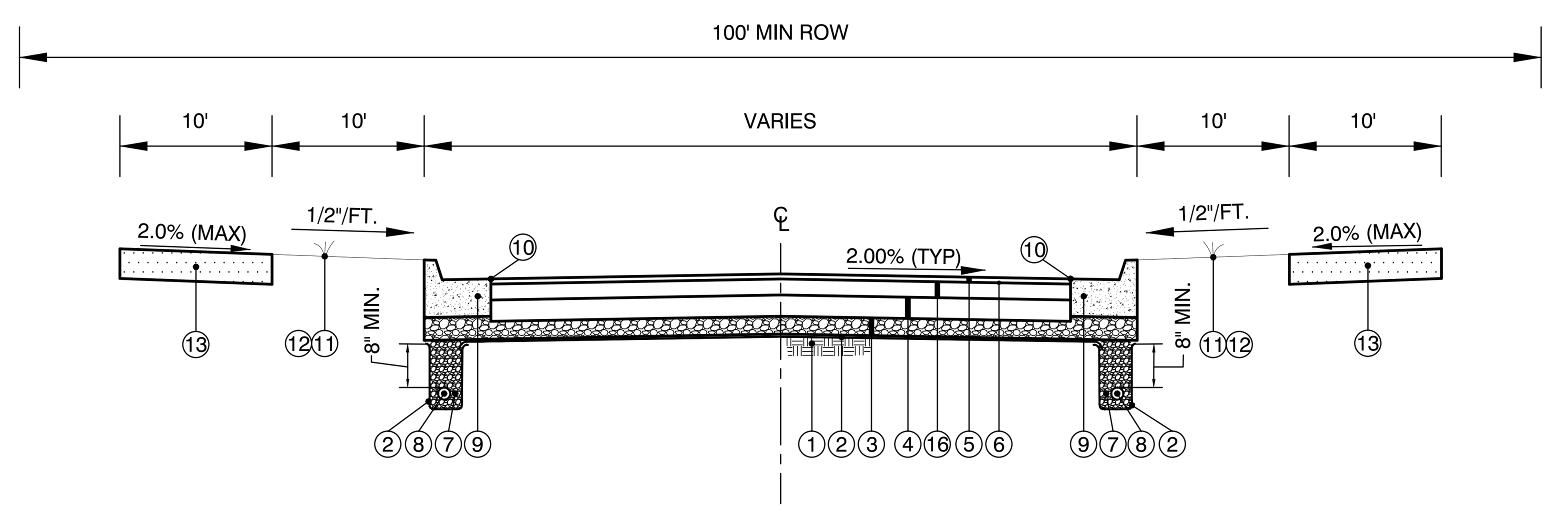

MAJOR ARTERIAL TYPICAL SECTION

1. ITEM 204 - SUBGRADE COMPACTION (INCIDENTAL TO ITEM 608)
2. ITEM SPL - WOVEN GEOTEXTILE, MIRAFI 600X OR EQUIVALENT, ALL OVERLAPS TO BE 18"
3. ITEM 304 - AGGREGATE BASE (10" MIN) CRUSHED LIMESTONE, ADJUST FOR DESIGN
4. ITEM 301 - ASPHALT CONCRETE BASE, PG64-22 (6"),ADJUST FOR DESIGN
5. ITEM 441 - ASPHALT CONCRETE SURFACE COURSE, TYPE 1 (446 & 448), PG64-22 (1.5")
6. ITEM 407 - ASPHALT TACK COAT (INCIDENTAL TO ITEM 441)
7. ITEM 203 - GRANULAR MATERIAL (INCIDENTAL TO ITEM 605)
8. ITEM 605 - 6" RIGID PVC PERFORATED PIPE UNDERDRAIN
9. ITEM 609 - COMBINATION CURB AND GUTTER, ODOT TYPE 2 (OR MATCH EXISTING CURB)
10. ITEM SPL - 3" WIDE HOT JOINT SEALER WHERE ASPHALT MEETS CURB PER MATERIAL SPEC. 705.04
11. ITEM 659 - SEEDING (80% FESCUE, 20% RYE) AND MULCHING, NO TREES, UNLESS WIDTH BETWEEN BACK OF CURB AND WALK IS GREATER THAN OR EQUAL TO 10'; ELSE, ALL STREET TREES MUST BE BEHIND SIDEWALK, NOT BETWEEN ROAD AND SIDEWALK
12. ITEM 659 - 4" TOPSOIL PLACED (80% FESCUE 20% RYE)
13. ITEM 608 - MIN. 5" CONCRETE WALK, AS PER PLAN (7" AT DRIVES AND RAMPS FOR RESIDENTIAL, 9" AT COMMERCIAL APRONS)
14. ITEM SPL - COMBINATION CURB AND GUTTER (ROLLED) (OR MATCH EXISTING CURB)
15. ITEM 304 - AGGREGATE BASE (6" MIN) CRUSHED LIMESTONE. ADJUST FOR DESIGN
16. ITEM 441 - ASPHALT CONCRETE INTERMEDIATE COURSE, TYPE 2 (448), (2")
17. ITEM 441 - ASPHALT CONCRETE SURFACE COURSE, TYPE 1 (446 & 448), PG64-22 (2")
18. 1" COMPACTED SAND LEVELING COURSE, PER 703.05A (INCIDENTAL TO ITEM 608)

NOTE: MAJOR ARTERIAL TYPICAL SECTION TO BE REVIEWED ON AN INDIVIDUAL BASIS WITH THE CITY.

11/27/17 - 01:33pm TAB: BLUE ASH SUBDIVISION REGS
C:\USERS\GOLDBERG\APPDATA\LOCAL\TEMP\ACPUBLISH_2040\150512 - BID BOOK DETAILS.DWG

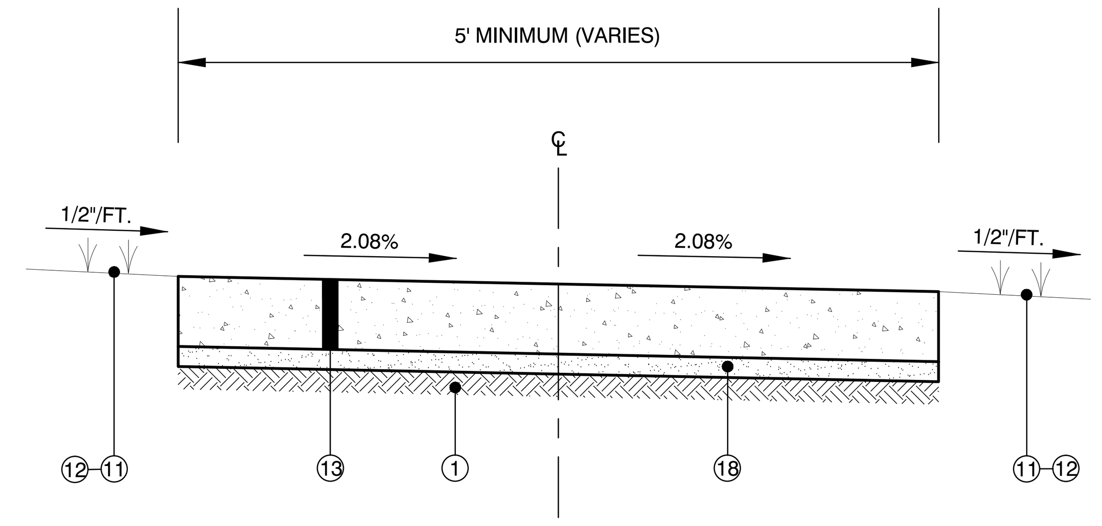

MULTI-USE PATH SECTION

N.T.S.

PAVEMENT SECTION
BROOMED FINISH
SAW CUT JOINTS
NO RETRACE OF EDGES/JOINTS

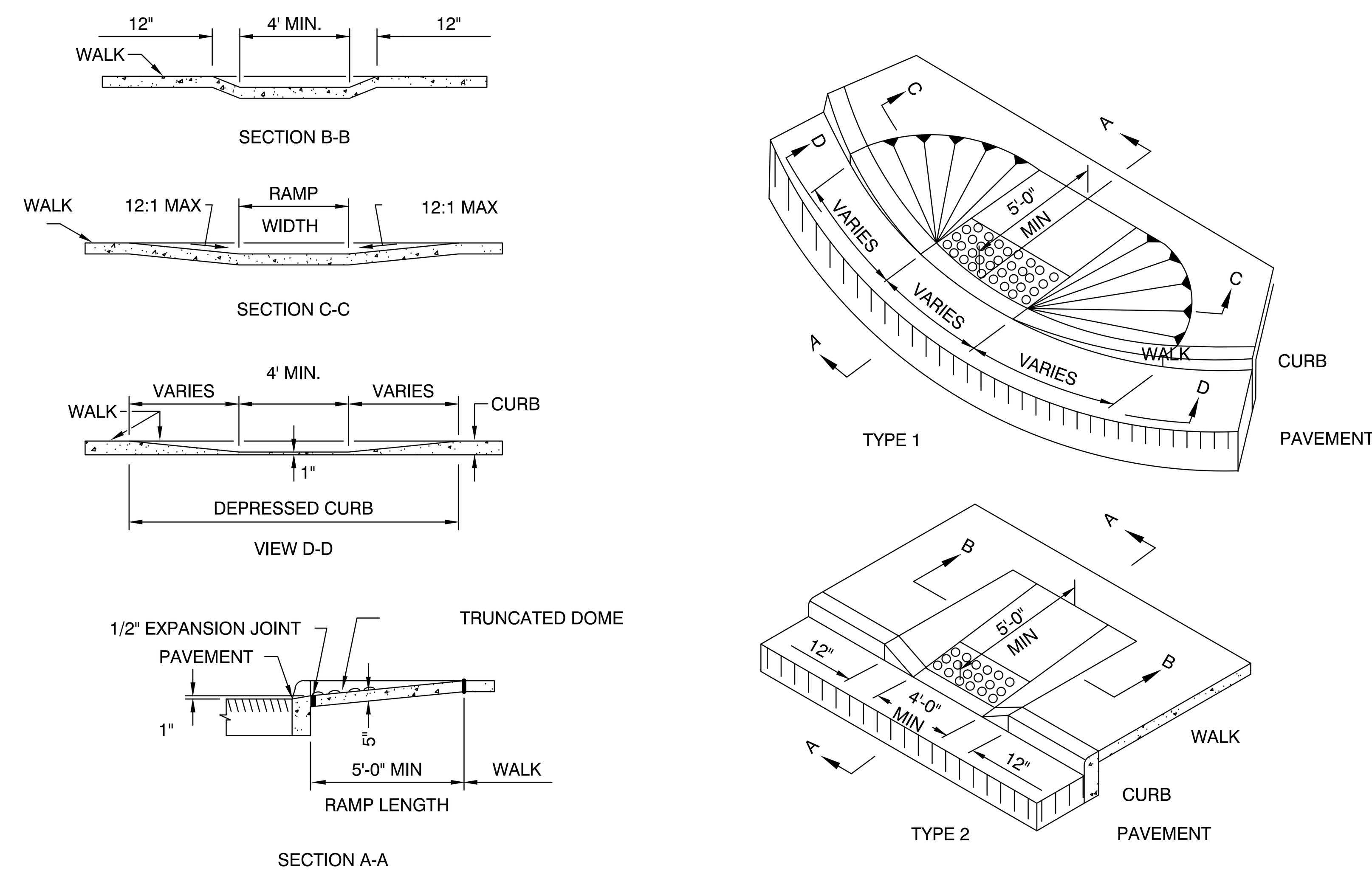

SURFACE TEXTURE SHALL BE OBTAINED BY COARSE BROOMING TRANSVERSE TO THE RAMP SLOPES AND SHALL BE ROUGHER THAN ADJACENT WALK.

JOINTS SHALL BE PROVIDED IN THE CURB RAMP AS EXTENSIONS OF WALK JOINTS AND CONSISTENT WITH ODOT REQUIREMENTS FOR NEW CONCRETE WALK. A ½ " ODOT 705.03 EXPANSION JOINT FILLER SHALL BE PROVIDED AROUND THE EDGE OF RAMPS BUILT IN EXISTING CONCRETE WALK. LINES SHOWN ON THIS DRAWING TO INDICATE THE RAMP EDGE AND SLOPE CHANGES ARE NOT NECESSARILY JOINT LINES.

DIMENSIONS, LOCATION AND TYPE OF CURB RAMP MAY BE MODIFIED AS DIRECTED BY THE ENGINEER IN ACCORDANCE WITH THE FOLLOWING:
TYPE OF CURB RAMP BUILT SHALL BE THE TYPE THAT BEST FITS THE LOCATION UNLESS A SPECIFIC TYPE IS SPECIFIED.

TYPE 1 IS PREFERRED BECAUSE OF THE FLATTER SIDE SLOPES. ANY COMBINATION OF TYPE 1 AND 2 SIDE SLOPES ON OPPOSITE SIDE OF A RAMP MAY BE USED TO BEST FIT THE SITE CONDITIONS.

SLOPE OF THE RAMP TOWARD THE CURB IS PREFERRED TO BE 12:1 OR FLATTER RELATED TO THE HORIZONTAL BUT THE MAXIMUM SLOPE SHALL BE 12:1 RELATED TO THE EXISTING OR PROPOSED WALK SLOPE. THE MINIMUM RAMP LENGTH IS 5' FROM THE BACK OF A 6" CURB AND MAY BE INCREASED WHERE FEASIBLE TO OBTAIN A FLATTER RAMP SLOPE OR TO BETTER BLEND WITH THE WALK CONFIGURATION.

WIDTH OF RAMP SHALL NORMALLY BE 4' BUT A MINIMUM WIDTH OF 40" MAY BE USED TO BETTER FIT THE WALK CONFIGURATION OR WHERE SITE CONDITIONS ARE RESTRICTED BY NARROW WALKS, POLE FOUNDATIONS, DRAINAGE INLETS, ETC. THE WIDTH MAY BE TAPERED.

WALK THICKNESS IN THE RAMP SLOPES SHALL BE 7" MINIMUM OR THICKER WITH 3" OF 304 AGGREGATE BASE AS NECESSARY TO MATCH ADJACENT WALK THICKNESS.

DRAINAGE:

TRUNCATED DOMES: INSTALL DETECTABLE WARNINGS (TRUNCATED DOMES) FOR A DISTANCE OF 24" FROM THE BACK OF CURB FOR THE ENTIRE WIDTH OF THE RAMP OPENING.

CONTRACTOR IS TO ENSURE THE BASE OF EACH CONSTRUCTED CURB RAMP ALLOWS FOR PROPER DRAINAGE, WITHOUT EXCEEDING ALLOWABLE CROSS SLOPE OR RAMP SLOPES. VERTICAL CHANGE IN LEVEL EXCEEDING ⅛" BETWEEN THE 1) PAVEMENT AND GUTTER, AND 2) GUTTER AND RAMP, ARE NOT ALLOWED

PLEASE REFER TO ODOT STANDARD DRAWINGS BP-7.1 NEW CURB RAMPS AND BP-7.2 RETROFIITED CURB RAMPS.

CURB RAMP W/ TRUNCATED DOMES DETAIL

N.T.S.

GENERAL PROVISIONS

1.) ANY EXCAVATION AND OPENING IN THE RIGHT OF WAY SHALL BE SECURED WITH SUFFICIENT BARRICADES, SIGNAGE, CAUTION TAPE, PLYWOOD (COVER EXCAVATIONS OUT OF STREET OVER NIGHT), APPROVED STEEL PLATES (COVER EXCAVATIONS IN STREET OVER NIGHT) AND OTHER TRAFFIC CONTROL DEVICES PROPERLY PRE WARNING ONCOMING TRAFFIC OF CONSTRUCTION. TRAFFIC SHALL BE MAINTAINED IN ACCORDANCE WITH ITEM 614 OF THE ODOT CONSTRUCTION AND MATERIAL SPECIFICATIONS AND IS REQUIRED BY PUBLIC WORKS DIRECTOR AND ENGINEERING TECHNICIAN/CITY INSPECTOR.

2.) ALL NECESSARY PRECAUTIONS SHALL BE TAKEN TO PROTECT THE PUBLIC FROM ACCIDENTS OF DAMAGE TO PERSONS OR PROPERTY DURING DURATION OF PROJECT. EACH PERSON, OR CONTRACTOR SHALL BE HELD LIABLE FOR ALL DAMAGES, INCLUDING COSTS INCURRED BY THE CITY IN DEFENDING ANY ACTION BROUGHT AGAINST IT FOR DAMAGES, AS WELL AS COST OF ANY APPEAL, THAT MAY RESULT FORM THE NEGLECT BY SUCH PERSON OR HIS/HER EMPLOYEES OF ANY NECESSARY PRECAUTION AGAINST INJURY OR DAMAGE TO PERSONS, VEHICLES OR PROPERTY OF ANY KIND.

3.) HOURS OF CONSTRUCTION-WORK WILL BE RESTRICTED TO 9:00 A.M. THROUGH 4:00 P.M. ON REED HARTMAN HIGHWAY, CORNELL ROAD, KENWOOD ROAD, AND COOPER ROAD MONDAY THROUGH FRIDAY. ANY WORK THAT ABUTS A RESIDENTIAL AREA WILL BE RESTRICTED TO 7:00 A.M. TO 7:30 P.M. MONDAY THROUGH FRIDAY, 9:00 A.M. TO 7:30 P.M. ON SATURDAYS, AND 9 A.M. TO 5:00 P.M. ON SUNDAYS.

4.) UNLESS OTHERWISE APPROVED, A MINIMUM OF ONE (1) LANE OF TRAFFIC IN EACH DIRECTION SHALL BE PROVIDED. ALL EFFORTS MUST BE MADE BY PERMIT HOLDER TO INSURE ACCESS TO ALL PROPERTIES ADJACENT TO THE PROJECT. IF TRAFFIC BECOMES LIMITED TO ONLY ONE (1) LANE FOR BOTH DIRECTIONS OF TRAVEL, A FLAGGER OR TEMPORARY TRAFFIC CONTROL DEVICE SHALL BE USED IN ORDER TO MAINTAIN PROPER TRAFFIC CYCLING. PERMIT HOLDER SHALL INSURE BEST EFFORTS TO PREVENT TRAFFIC BACK UP.

5.) NOTICES SHALL BE MADE TO THE PUBLIC WORKS DIRECTOR, CITY INSPECTOR, AND ALL PUBLIC AND PRIVATE INDIVIDUALS, FIRMS, AND CORPORATIONS AFFECTED BY THE WORK TO BE DONE AT LEAST SEVEN (7) BUSINESS DAYS BEFORE WORK COMMENCES, AND THE CITY INSPECTOR SHALL BE NOTIFIED TWENTY-FOUR (24) HOURS PRIOR TO BACKFILL OF TRENCH OR EXCAVATION UNLESS EXCAVATION IS DUE TO AN EMERGENCY AS NOTED IN BLUE ASH CODIFIED ORDINANCES 949.06 (C) (1) AND/OR 949.08 (C).

6.) IF AND WHEN THE PROJECT WILL RESULT IN THE LOSS OF UTILITY SERVICE TO PRIVATE PROPERTIES OR BUSINESSES, THE OWNERS SHALL BE NOTIFIED IN WRITING OR BY PERSONAL CONTACT AT LEAST TWELVE (12) HOURS IN ADVANCE OF THE LOSS OF SERVICE.

7.) ADEQUATE DRAWINGS OR SKETCHES SHALL BE INCLUDED WITH APPLICATION PERMIT SHOWING THE EXISTING AND/OR PROPOSED LOCATION OF THE EXCAVATION.

8.) PRIOR TO EXCAVATION, THE CONTRACTOR SHALL FIRST CONTACT OUPS TO DETERMINE LOCATIONS OF UNDERGROUND UTILITIES. (1-800-362-2764). ANY UTILITY PROVIDERS NOT A MEMBER OF OUPS MUST BE CONTACTED FOR UTILITY LOCATING AND MARKING

9.) PAVEMENT REMOVAL SHALL BE SAW CUT IN NEAT, STRAIGHT LINES. EXCAVATE AS SMALL OF AN AREA AS NEEDED. IF THE PAVEMENT IS DAMAGED BEYOND ORIGINAL SAW CUT LINES, CONTRACTOR MUST CUT BACK A SQUARED OFF SECTION FAR ENOUGH TO CLEAN UP THE DAMAGED AREA.

10.) EXCAVATED MATERIAL MUST BE PILED IN A WAY NOT TO DISRUPT MOTOR AND PEDESTRIAN TRAFFIC. CURB AND GUTTERS SHALL BE KEPT CLEAN TO PROVIDE PROPER DRAINAGE.

11.) ALL EXCAVATED AREAS OUTSIDE OF THE STREET MUST BE CORRECTLY COMPACTED UPON BACKFILLING. ALL EXCAVATIONS CAN BE SUBJECT TO TESTING. BACKFILLED MATERIAL NOT ACHIEVING THE COMPACTION REQUIREMENTS SHALL BE REMOVED AND RE-COMPACTED BY CONTRACTOR AT THE CONTRACTORS COST.

12.) TRENCH SAFETY SHALL BE UTILIZED AT ALL TIMES IN STRICT ACCORDANCE WITH STATE AND FEDERAL SAFETY STANDARDS.

13.) JOINT OR CRACK SEAL IS REQUIRED ON EACH STREET REPAIR AND PAVEMENT CUT MADE.

14.) APPLICANT TO RESTORE TRENCH IN THE ROADWAY PER ROADWAY TRENCH RESTORATION DETAIL.

15.) RIGHT OF WAY WORK SHALL BE CLEANED AT THE END OF EACH DAY AND BE NEAT AND PRESENTABLE. ALL CATCH BASINS, CULVERTS, AND STORM SEWERS AFFECTED BY PROJECT DIRT, MUD, ROCK, AND DEBRIS SHALL BE CLEANED OUT TO PROVIDE FOR PROPER DRAINAGE.

16.) VEHICLES AND EQUIPMENT SET UP ON SIDEWALK IS STRICTLY FORBIDDEN. ANY VIOLATIONS WILL RESULT IN IMMEDIATE SHUTDOWN OF WORK AND POSSIBLE CITATIONS. ANY DAMAGES TO ADJACENT INFRASTRUCTURE WILL BE REPLACED AT THE CONTRACTORS COST.

17.) RESTORATION OF THE RIGHT OF WAY IS REQUIRED AND SHALL BE COMPLETED IMMEDIATELY AFTER EXCAVATION AND BY THE TERMINATION DATE ON THE PERMIT.

18.) IN THE EVENT THAT TRENCH RESTORATION DOES NOT COMPLY WITH THE SPECIFICATIONS OF THIS SECTION, THE CITY MAY ORDER THE WORK REDONE AND/OR CONTRACT FOR THE REWORK AND CHARGE ALL COSTS ASSOCIATED WITH THE REWORK TO THE PERMIT HOLDER.

19.) ANY REPLACEMENT OF, ADDITION TO, OR CHANGE IN THE FACILITY GRANTED BY THIS PERMIT SHALL REQUIRE A NEW PERMIT PRIOR TO INITIATION OF SUCH WORK.

20.) ALL WORKMANSHIP AND MATERIALS USED BY THE PERMIT HOLDER, AND/OR ITS SUBCONTRACTORS, TO REPAIR THE DIRECTOR AND/OR ENGINEERING TECHNICIAN/CITY INSPECTOR AND SHALL BE WARRANTED FOR A PERIOD OF ONE (1) YEAR FROM THE DATE OF COMPLETION FOR FAILURE DUE TO WORKMANSHIP OR QUALITY OF MATERIALS.

TESTING REQUIREMENTS:

MINIMUM TESTING REQUIREMENTS SHALL BE AS FOLLOWS:

SOIL TESTING: EXCAVATION AND EMBANKMENT CONSTRUCTION SHALL BE CONSTRUCTED IN ACCORDANCE WITH ODOT CMS ITEM 203. THE TESTING AGENCY SHALL TEST ALL EMBANKMENTS PER ODOT CMS ITEM 203.07.

SUBGRADE SHALL BE PREPARED IN ACCORDANCE WITH ODOT CMS ITEM 204. THE TESTING AGENCY SHALL TEST ALL SUBGRADE PER ODOT CMS ITEM 204.03

FLEXIBLE PAVEMENT: THE TESTING AGENCY SHALL PROVIDE QUALITY CONTROL TESTING OF ASPHALT MIXES PER ODOT CMS ITEM 403.05. FIELD DENSITY TESTING WILL BE REQUIRED FOR ASPHALT COURSES. THE CONTRACTOR SHALL SUBMIT A JOB MIX FORMULA (JMF) PRIOR TO PAVING OPERATIONS.

PORTLAND CEMENT CONCRETE: ALL PORTLAND CEMENT CONCRETE WORK SHALL BE TESTED BY AN INDEPENDENT TESTING LABORATORY. THE INDEPENDENT TESTING LABORATORY SHALL SECURE A RANDOM SAMPLE FROM EACH 50 CUBIC YARDS OF CONCRETE DELIVERED TO THE JOB SITE. A MINIMUM OF ONE SAMPLE SHALL BE MADE EACH DAY THAT CONCRETE WORK IS PERFORMED. ONE SAMPLE CONSISTS OF A MINIMUM OF FOUR (4) CYLINDERS. THE CYLINDERS SHALL BE MOLDED BY THE TESTING LABORATORY AND CURED FROM EACH SAMPLE, IN ACCORDANCE WITH ASTM C 172. CYLINDERS SHALL THEN BE TESTED IN ACCORDANCE WITH ASTM C39. TWO (2) CYLINDERS SHALL BE TESTED AT 28 DAYS TO CONSTITUTE A COMPRESSIVE-STRENGTH TEST.

A COMPRESSIVE-STRENGTH TEST SHALL BE THE AVERAGE COMPRESSIVE STRENGTH FROM A SET OF TWO (2) SPECIMENS OBTAINED FROM SAME COMPOSITE SAMPLE AND TESTED AT AGE INDICATED. TWO (2) CYLINDERS SHALL BE TESTED AT 56 DAYS ONLY IF THE 28-DAY TEST RESULTS DO NOT MEET SPECIFICATIONS. IF THE CONTRACTOR ELECTS TO TEST ONE CYLINDER AT SEVEN (7) DAYS, IT WILL BE FOR INFORMATION ONLY. TWO (2) CYLINDERS NEED TO BE TESTED TO CONSTITUTE A COMPRESSIVE-STRENGTH TEST. ADDITIONAL CYLINDERS MUST BE MADE FOR 7-DAY TESTS. STRENGTH OF EACH CONCRETE MIXTURE WILL BE SATISFACTORY IF EVERY AVERAGE OF ANY THREE (3) CONSECUTIVE COMPRESSIVE-STRENGTH TESTS EQUAL OR EXCEEDS SPECIFIED COMPRESSIVE STRENGTH AND NO COMPRESSIVE-STRENGTH TEST VALUE FALLS BELOW SPECIFIED COMPRESSIVE STRENGTH BY MORE THAN 500 PSI (3.4 MPA). IF LESS THAN THREE (3) COMPRESSIVE-STRENGTH TESTS ARE MADE, THEN THE AVERAGE OF THE ACTUAL NUMBER OF TESTS WILL BE USED TO DETERMINE ACCEPTANCE.

USING ASTM C 143, THE TESTING AGENCY SHALL DETERMINE THE SLUMP OF THE CONCRETE FOR EACH SAMPLE, AND ALSO WHENEVER THE CONSISTENCY OF THE CONCRETE APPEARS TO VARY. THE AGENCY SHALL ALSO DETERMINE THE AIR CONTENT OF THE CONCRETE FOR EACH SAMPLE, IN ACCORDANCE WITH EITHER ASTM C 231, ASTM C 173, OR ASTM C 138.

THE AGENCY SHALL REPORT ALL TEST AND INSPECTION RESULTS TO THE CITY, IN WRITING ONE WORKING DAY AFTER THE WORK IS PERFORMED. ALL TEST REPORTS SHALL INCLUDE THE EXACT LOCATION IN THE WORK AT WHICH THE BATCH REPRESENTED BY A SAMPLE WAS DEPOSITED. REPORTS OF STRENGTH TESTS SHALL INCLUDE DETAILED INFORMATION ON STORAGE AND CURING OF SPECIMENS PRIOR TO TESTING.

ALL CONCRETE WORK NOT MEETING THE SPECIFICATIONS AS LISTED IN ITEM 499 AND AS NOTED HEREIN SHALL BE REMOVED IMMEDIATELY AND REPLACED IN AN ACCEPTABLE MANNER WITH NO ADDITIONAL COMPENSATION TO THE CONTRACTOR, UNLESS PROVISIONS FOR AN EXTENDED GUARANTEE ARE PROVIDED HEREIN.

***APPLICANT MUST CALL THE ENGINEERING TECHNICIAN AT (513) 745-8536 FOR INSPECTION 24 HOURS PRIOR TO BACKFILL AND ACCEPTANCE OF SUBGRADE.**

your trusted advisor consultants → engineers architects planners

© 2017CT CONSULTANTS

CONSULTANTS

SEAL

PRELIMINARY
NOT
RELEASED FOR
CONSTRUCTION

DRAWING TITLE: DETAILS

PROJECT TITLE: SUBDIVISION REGULATIONS CITY OF BLUE ASH HAMILTON CO., OHIO

REVISIONS

NO.	DATE	BY	DESCRIPTION

SCALE	DATE
NTS	11-21-2017
DRAWN BY	PROJECT MGR
BGOL	FTWE
PROJECT NO.	FLAT FILE
150512	

DRAWING No.

DET1

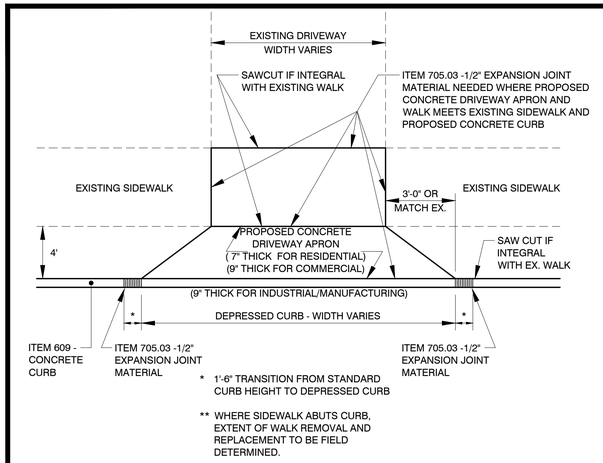

* 1'-6" TRANSITION FROM STANDARD CURB HEIGHT TO DEPRESSED CURB

** WHERE SIDEWALK ABUTS CURB, EXTENT OF WALK REMOVAL AND REPLACEMENT TO BE FIELD DETERMINED.

ITEM 452 - NON-REINFORCED CONCRETE PAVEMENT - RESIDENTIAL DRIVEWAY APRON DETAIL

NTS

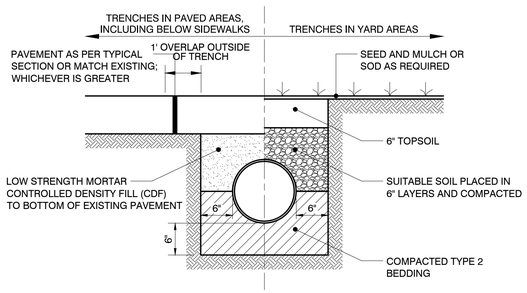

TYPICAL TRENCH BACKFILL

NTS

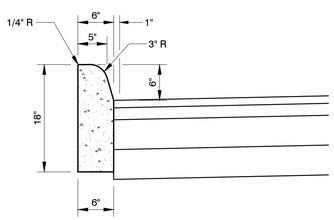

ITEM 609 - TYPE 6 CURB

NTS

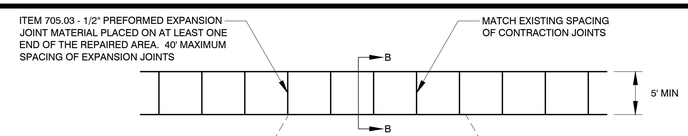

PLAN VIEW

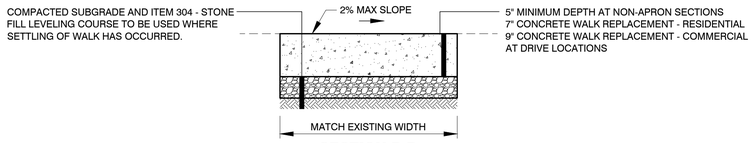

SECTION B-B

NOTES:

1.) THE CITY SHALL MARK IN THE FIELD THE WALK TO BE REPLACED, REPLACEMENT WALK SHALL MATCH THE LINE AND GRADE OF THE EXISTING WALK AND THE SAME JOINT PATTERN SHALL BE MAINTAINED. ITEM 705.03 - 1/2" PREFORMED EXPANSION JOINT MATERIAL SHALL BE PLACED ON AT LEAST ONE END OF THE REPAIRED AREA. ALL REPAIRS ARE TO BE MADE TO THE NEAREST JOINT. ANY DAMAGE TO ADJACENT WALK OR DRIVEWAY BY THE CONTRACTOR, THE COST SHALL BE INCURED BY THE CONTRACTOR.

2.) THE FINISH APPLIED TO THE CONCRETE WALK SHALL BE CONSISTENT WITH THE EXISTING WALK IT IS TO MATCH AND BE APPROVED BY THE CITY. ALL JOINTS AND OUTSIDE EDGES OF THE WALK SHALL BE TOOLED WITH AN EDGER OR JOINT TOOL AFTER BROOMING OR HAND FINISHING OF THE FINAL FINISH. FOR SIDEWALKS THAT ARE INSTALLED AND THEN SAW CUT, MATCH EXISTING SIDEWALKS.

3.) THE REPLACEMENT SIDEWALK SHALL BE A MINIMUM THICKNESS OF 7" AT RESIDENTIAL APRONS AND A MINIMUM THICKNESS OF 9" AT COMMERCIAL APRONS.

4.) ALL DISTURBED YARD AREAS SHALL BE RESTORED TO GRADE, SEEDED, AND MULCHED BEFORE THE WORK IS APPROVED FOR PAYMENT AND SHALL BE INCIDENTAL TO ITEM 608 - SIDEWALK, REMOVE AND REPLACE.

ITEM 608 - CONCRETE SIDEWALK DETAIL

NTS

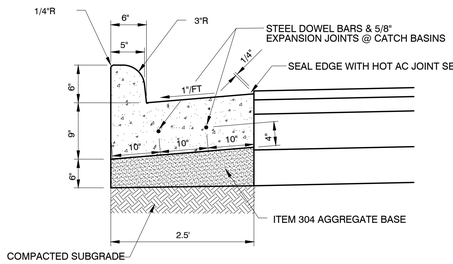

ITEM 609 - TYPE 2 CURB AND GUTTER

NTS

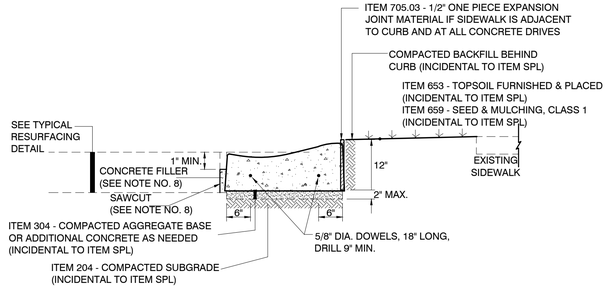

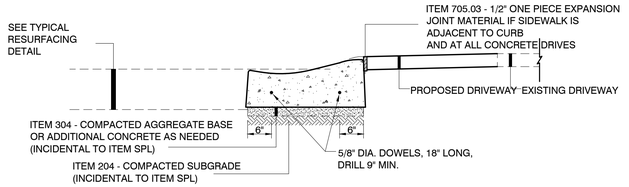

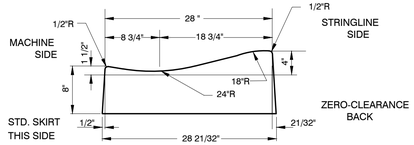

MULE LENGTH: 44"
FINISHING PAN = 12" QUICK DETACH
SNOUT LENGTH = NONE
HOPPER = INTEGRAL
MOUNTING = QICK TO RH POUR M1000
SKIRTS: BACK = ZERO CLEARANCE
FRONT = 1/4 X 4 (0"-2")

GENERAL NOTES:

1.) CONCRETE SHALL BE 4000 PSI @ 28 DAYS WITH 5% MIN. TO 8% MAX. ENTRAINED AIR.
2.) MAINTAIN SPACING OR EXISTING EXPANSION AND CONTRACTION JOINTS.
3.) THE COST OF ANY REQUIRED YARD RESTORATION WHICH WOULD INCLUDE TOPSOIL AND/OR SEEDING AND MULCHING SHALL BE INCIDENTAL TO ITEM SPL, CONCRETE CURB AND GUTTER, REMOVE AND REPLACE.
4.) THE MIN. CURB AND GUTTER REPLACEMENT SHALL BE 3'-0" WITH EXPANSION MATERIAL AND DOWELS PLACED ON AT LEAST ONE END OF THE REPAIRED SECTION.

HAND FORMED CURB

5.) DOWELING WILL BE REQUIRED AT EXPANSION JOINTS IN THE NEW CURB. TWO DOWELS SHALL BE PLACED PER DETAIL.
EXPANSION JOINTS SHALL BE PLACED:
A.) AT A MAXIMUM SPACING OF 40'.
B.) ONE FOOT ON EACH SIDE OF CATCH BASIN PER ODOT STANDARD DRAWINGS CB-3 AND CB-3A.
C.) ALL CURB RADII RETURNS AND AT ALL STOPS IN POURS.
D.) WHERE THE NEW CURB MEETS THE EXISTING CURB.

MACHINE FORMED CURB

6.) DOWELING WILL BE REQUIRED AT EXPANSION JOINTS IN THE NEW CURB. TWO DOWELS SHALL BE PLACED PER DETAIL. EXPANSION JOINTS SHALL BE PLACED:
A.) ONE FOOT ON EACH SIDE OF CATCH BASINS PER ODOT STANDARD DRAWINGS CB-3 AND CB-3A.
B.) ALL CURB RADII RETURNS AND AT ALL STOPS IN POURS.
C.) WHERE THE NEW CURB MEETS THE EXISTING CURB.

7.) THE DIMENSIONS ABOVE MAY BE MODIFIED BY THE ENGINEER IN THE FIELD TO MATCH THE DIMENSIONS OF THE VARIOUS EXISTING CURBS TO BE REMOVED.
8.) TO BE USED WHERE NEW CURB DOES NOT MEET EXISTING PAVEMENT.
9.) NOT USED.
10.) IF THE CONTRACTOR BREAKS THE APRON WHILE INSTALLING THE CURB, HE SHALL REPLACE THE APRON TO A MIN. 4' BEHIND THE CURB (FULL WIDTH OF APRON) AND REVIEW WITH THE CITY AND HOMEOWNER. THE COST SHALL BE INCIDENTAL TO ITEM 609.
11.) IF THE APRON WAS SPALLED BEFORE CONSTRUCTION, THE CONTRACTOR SHALL CLEAN AND PATCH THE APRON UP TO 4' BEHIND THE CURB IN ORDER TO PROVIDE A SMOOTH TRANSITION TO THE PROPOSED CURB. THE COST SHALL BE INCIDENTAL TO ITEM 611.
12.) WORK PERFORMED ON APRONS WHICH FALL APART AFTER THE CURB IS REMOVED DUE TO NO FAULT OF THE CONTRACTOR (PRE-EXISTING CONDITION) SHALL BE A SEPARATE PAY ITEM.

ITEM SPL - COMBINATION ROLLED CURB & GUTTER REPLACEMENT DETAIL

NTS

your trusted advisor consultants engineers architects planners
© 2017CT CONSULTANTS

CONSULTANTS

PRELIMINARY
NOT
RELEASED FOR
CONSTRUCTION

SEAL

DRAWING TITLE
DETAILS

PROJECT TITLE
SUBDIVISION REGULATIONS
CITY OF BLUE ASH
HAMILTON CO., OHIO

REVISIONS

NO.	DATE	BY	DESCRIPTION

SCALE	DATE
NTS	11-21-2017
DRAWN BY	PROJECT MGR
BGOL	FTWE
PROJECT NO.	FLAT FILE
150512	

DRAWING No.
DET2

SHEET 2 OF 2

11/27/17 01:33pm TAB: BLUE ASH SUBDIVISION REGS 2
C:\USERS\CLTWORK\APPDATA\LOCAL\TEMP\ACPUBLISH_2500\150512 - BLUE ASH SUBDIVISION REGULATIONS\DETAILS.DWG